MANUFACTURER DOCUMENT PACKAGE

Manufacturer's Manual

Selected official pages for procurement and maintenance review

PRODUCT BRAND

Siemens

PRODUCT MODEL

6ES7390-1AE80-0AA0

S7-300 Mounting Rail. Relevant section pages: 32, 97, 98, 99, 100, 101, 107. Adjacent model text on shared pages is outside this product reference.

OFFICIAL SOURCE

CPU 31xC and CPU 31x: Installation; 03/2011, A5E00105492-12

Siemens original documentation and product reference

This reference applies to the 482.6 mm ready-to-use rail with 450 mm usable module space. Cutting and drilling instructions for the separate 2 m rail do not apply. The 0.8-1.1 Nm value concerns module fixing, not the M6 rail-to-panel screws.

AMIKON PRODUCT SUPPORT

+86-18020776786 INFO@AMIKON.CN

AMIKONG.COM

Amikon Limited prepared this independent reference package. Selected manufacturer pages follow with their original content and pagination visible.

SIEMENS

SIMATIC

S7-300
CPU 31xC and CPU 31x: Installation

Operating Instructions

Preface

Guide to the S7-300 documentation 1

Installation Sequence 2

S7-300 components 3

Configuring 4

Installing 5

Wiring 6

Addressing 7

Commissioning 8

Maintenance 9

Debugging functions, diagnostics and troubleshooting 10

General technical specifications 11

Appendix A

This manual is part of the documentation package with order number:
6ES7398-8FA10-8BA0

03/2011
A5E00105492-12

Legal information

Warning notice system

This manual contains notices you have to observe in order to ensure your personal safety, as well as to prevent damage to property. The notices referring to your personal safety are highlighted in the manual by a safety alert symbol, notices referring only to property damage have no safety alert symbol. These notices shown below are graded according to the degree of danger.

⚠ DANGER
indicates that death or severe personal injury **will** result if proper precautions are not taken.

⚠ WARNING
indicates that death or severe personal injury **may** result if proper precautions are not taken.

⚠ CAUTION
with a safety alert symbol, indicates that minor personal injury can result if proper precautions are not taken.

CAUTION
without a safety alert symbol, indicates that property damage can result if proper precautions are not taken.

NOTICE
indicates that an unintended result or situation can occur if the corresponding information is not taken into account.

If more than one degree of danger is present, the warning notice representing the highest degree of danger will be used. A notice warning of injury to persons with a safety alert symbol may also include a warning relating to property damage.

Qualified Personnel

The product/system described in this documentation may be operated only by **personnel qualified** for the specific task in accordance with the relevant documentation for the specific task, in particular its warning notices and safety instructions. Qualified personnel are those who, based on their training and experience, are capable of identifying risks and avoiding potential hazards when working with these products/systems.

Proper use of Siemens products

Note the following:

⚠ WARNING
Siemens products may only be used for the applications described in the catalog and in the relevant technical documentation. If products and components from other manufacturers are used, these must be recommended or approved by Siemens. Proper transport, storage, installation, assembly, commissioning, operation and maintenance are required to ensure that the products operate safely and without any problems. The permissible ambient conditions must be adhered to. The information in the relevant documentation must be observed.

Trademarks

All names identified by ® are registered trademarks of the Siemens AG. The remaining trademarks in this publication may be trademarks whose use by third parties for their own purposes could violate the rights of the owner.

Disclaimer of Liability

We have reviewed the contents of this publication to ensure consistency with the hardware and software described. Since variance cannot be precluded entirely, we cannot guarantee full consistency. However, the information in this publication is reviewed regularly and any necessary corrections are included in subsequent editions.

이 기기는 업무용(A급) 전자파 적합기기로서 판매자 또는 사용자는 이 점을 주의하시기 바라며 가정 외의 지역에서 사용하는 것을 목적으로 합니다.

Siemens AG
Industry Sector
Postfach 48 48
90026 NÜRNBERG
GERMANY

A5E00105492-12
Ⓟ 04/2011

Copyright © Siemens AG 2011.
Technical data subject to change

Preface

Purpose of this manual

This manual contains essential information about the following:

- Installation
- Communication
- Memory concept
- Cycle and response times
- Technical specifications of the CPUs.

Basic knowledge required

- In order to understand this manual, you require a general knowledge of automation engineering.
- You require knowledge of STEP 7 basic software.

Scope

The name CPU 31xC summarizes all compact CPUs, as table below shows:

CPU	Convention: CPU designations:	Order number	As of firmware version
CPU 312C	CPU 31xC	6ES7312-5BF04-0AB0	V3.3
CPU 313C		6ES7313-5BG04-0AB0	V3.3
CPU 313C-2 PtP		6ES7313-6BG04-0AB0	V3.3
CPU 313C-2 DP		6ES7313-6CG04-0AB0	V3.3
CPU 314C-2 PtP		6ES7314-6BH04-0AB0	V3.3
CPU 314C-2 DP		6ES7314-6CH04-0AB0	V3.3
CPU 314C-2 PN/DP		6ES7314-6EH04-0AB0	V3.3

The name CPU 31x summarizes all standard CPUs, as table below shows:

4.3 Component dimensions

Length of the mounting rails

Table 4- 1 Mounting rails - Overview

Mounting rail length	Usable length for modules	Order number
160 mm	120 mm	6ES7390-1AB60-0AA0
482.6 mm	450 mm	6ES7390-1AE80-0AA0
530 mm	480 mm	6ES7390-1AF30-0AA0
830 mm	780 mm	6ES7390-1AJ30-0AA0
2000 mm	cut to length as required	6ES7390-1BC00-0AA0

In contrast to other rails, the 2 m mounting rail is not equipped with any fixing holes. These must be drilled, allowing optimal adaptation of the 2 m rail to your application.

Installation Dimensions of the Modules

Table 4- 2 Module width

Module	Width
Power supply module PS 307, 2 A	40 mm
Power supply module PS 307, 5 A	60 mm
Power supply module PS 307, 10 A	80 mm
CPU	For information on assembly dimensions, refer to the technical data in *CPU 31xC and CPU 31x manual, technical data*.
Analog input/output modules	40 mm
Digital input/output modules	40 mm
Simulator module SM 374	40 mm
Interface modules IM 360 and IM 365	40 mm
Interface module IM 361	80 mm

- Module height: 125 mm
- Module height with shield connection element 185 mm
- Maximum assembly depth: 130 mm
- Maximum assembly depth of a CPU with an inserted DP connector with angled cable feed: 140 mm
- Maximum assembly depth with open front panel (CPU): 180 mm

Dimensions of other modules such as CPs, FMs etc. are found in the relevant manuals.

5.2 Installing the mounting rail

Mounting rail versions available

- Ready-to-use, four standard lengths (with 4 holes for fixing screws and 1 ground conductor bolt)
- One meter mounting rail
  May be shortened to any special length. Supplied without holes for fixing screws and without ground conductor bolt.

Requirement

Prepare the 2 m mounting rail for installation.

Preparing the 2 m mounting rail for installation

1. Cut the 2 m mounting rail to the required length.
2. Mark out:
   – four bores for the fixing screws
     (for dimensions, refer to "Dimensions for fixing holes")
   – one hole for the protective conductor bolt.
3. If the length of your rail exceeds 830 mm, you must stabilize it by providing additional holes for fixing it with more screws.

   Mark out these holes along the groove in the middle section of the rail (see the Figure below). The pitch should be approx. 500 mm.
4. Drill the marked holes with a diameter of 6.5 $^{+0.2}$mm for M6 screws.
5. Mount an M6 bolt for fixing the ground conductor.

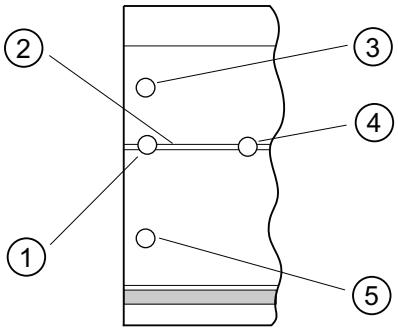

Number	Description
①	Hole for the ground conductor bolt
②	Groove for drilling additional holes for mounting screws
③	Hole for the mounting screw
④	Additional hole for mounting screw
⑤	Hole for the mounting screw

Dimension of the mounting holes

The mounting hole dimensions for the mounting rail are shown in the table below.

Table 5- 3 Mounting holes for rails

"Standard" mounting rail			2 m mounting rail
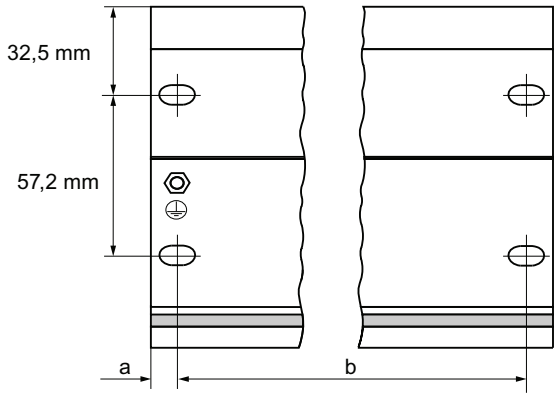			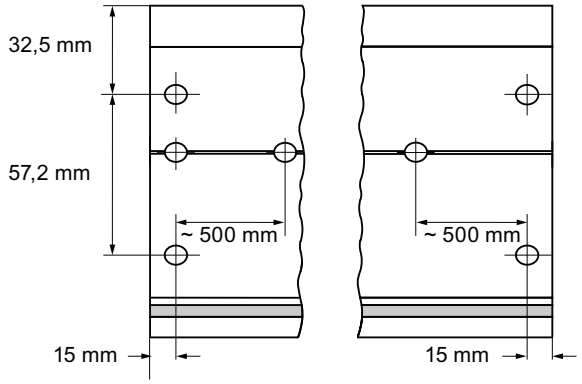
Length of rail	Dimension a	Dimension b	–
160 mm	10 mm	140 mm	
482.6 mm	8.3 mm	466 mm	
530 mm	15 mm	500 mm	
830 mm	15 mm	800 mm	

Fixing screws

You can use the following screw types for mounting the rails:

For ...	you can use ...	Explanation
outer fixing screws	Cylindrical head screw M6 to ISO 1207/ISO 1580 (DIN 84/DIN 85)	Choose a suitable screw length for your assembly. You also need size 6.4 washers to ISO 7092 (DIN 433)
	M6 hexagonal head screw to ISO 4017 (DIN 4017)	
Additional fixing screws (only 2 meter mounting rail)	Cylindrical head screw M6 to ISO 1207/ISO 1580 (DIN 84/DIN 85)	

Installing the mounting rail

1. Install the mounting rails so that sufficient space is available for installing modules and to allow heat dissipation (clearance of at least 40 mm above and below the modules. See the figure below).
2. Mark up the mounting holes on the mounting surface. Drill the holes with a diameter of $6.5^{+0.2}$ mm.
3. Screw the rail (M6 screws) onto the mounting surface.

Note

Always make sure of a low-impedance contact between the rail and a mounting surface, if the latter is a grounded metal panel or equipment mounting panel. On varnished or anodized metals, for instance, use a suitable contacting agent or contact washers.

The figure below shows the clearance required for the installation of an S7-300.

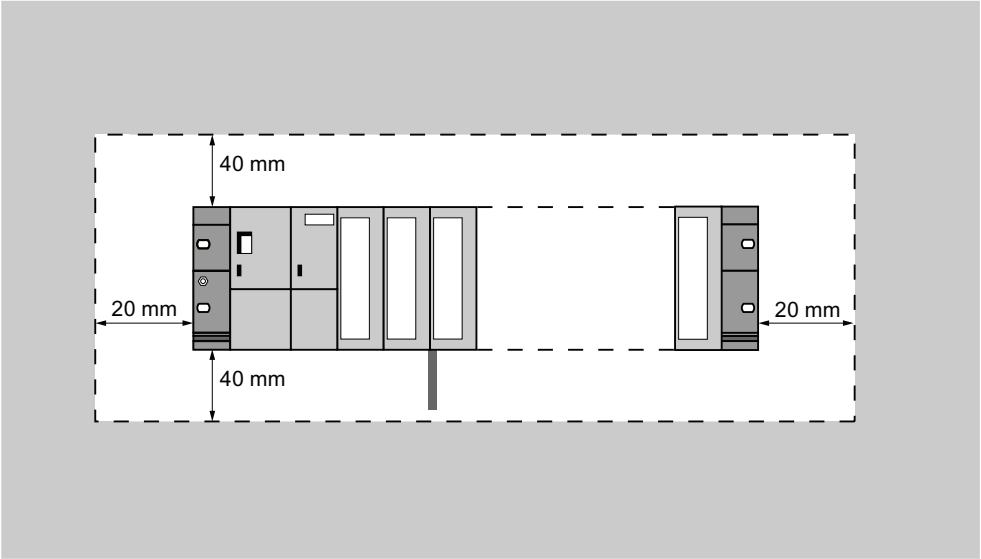

5.3 Installing modules on the mounting rail

Rules governing

The table below shows you points to follow when wiring, installing or removing S7-300 modules.

Rules for the tightening torque of..	... power supply, CPU,SM, FM, CP
Fixing modules to the mounting rail	from 0.8 Nm to 1.1 Nm

Requirements for module installation

- The configuration of the automation system is completed.
- The mounting rail is installed.

Mounting order of the modules

Hang the modules onto the rail, starting at the left and in the following order:

1. Power supply module
2. CPU
3. SMs, FMs, CPs, IMs

Note

Please check **before** you insert any SM 331 analog input modules whether you have to reposition the measuring range submodules at the side of the module. For more information, see the "Analog modules" chapter in the *Module Data* Manual.

Note

When installing an S7-300 system with ungrounded reference potential, make the relevant settings on the CPU. You ideally do so before you mount any modules onto the rail.

Installation steps

The various steps in module installation are explained below.

1.	Plug the bus connectors into the CPU and signal/function/communication/ interface modules. Each of these modules comes with a bus connector, except for the CPU. • Always start at the CPU when you plug in the bus connectors. Remove the bus connector from the "last" module of the assembly. • Plug the bus connectors into the other modules. The "last" module does not receive a bus connector.	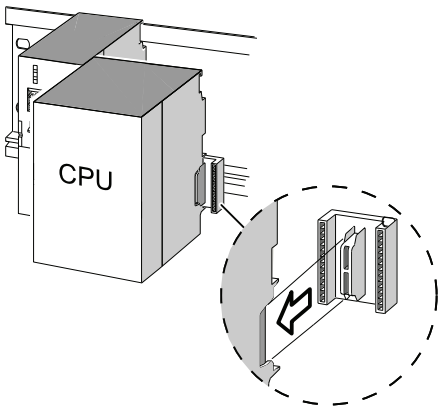
2.	Add all modules to the rail in the specified order ①, slide them up to the module on the left ②, then swing them down ③.	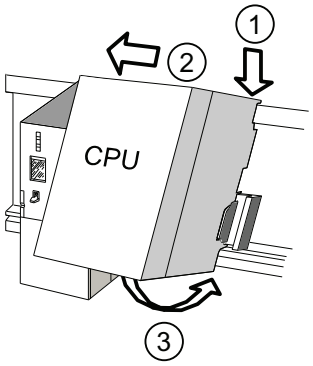
3.	Screw-tighten the modules.	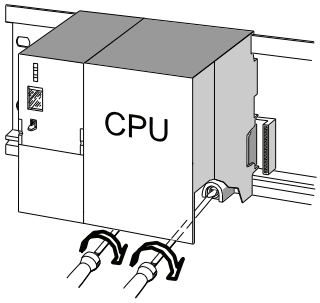

See also

Installing an S7-300 with ungrounded reference potential (not CPU 31xC) (Page 45)

6.2 Bonding the Protective Conductor to the Mounting Rail

Requirement

The mounting rail is fixed onto the mounting surface.

Connecting the protective conductor

Connect the mounting rail to the protective conductor.
The mounting rail is provided with a M6 protective conductor screw for this purpose.

Minimum cross-section of the protective conductor: 10 mm^2

The figure below shows how the protective conductor has to be bonded to the rail.

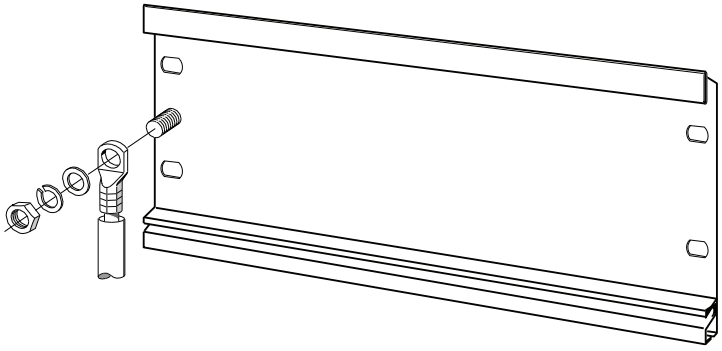

Note

Always make sure of a low-impedance contact between the protective conductor and the rail. You can achieve this by using a low-impedance cable, keeping it as short as possible and contacting it to a large surface.
For example, an S7-300 mounted on a hinged frame must be connected to ground using a flexible grounding strap.