AMIKON TECHNICAL DOCUMENTATION

Installation Instructions

Siemens 6ES7134-4FB00-0AB0

ET 200S Voltage Input Module

INPUTS	RANGES	REFERENCE	WIDTH
2 voltage	**±5 / ±10 / 1-5 V**	**MANA**	**15 mm**

For qualified personnel only. Isolate the equipment and follow the complete manufacturer and site safety procedures. This reference does not replace the approved project design or the full installation manual.

01 PREPARATION AND WIRING CHECKS

- Match the installed TM terminal arrangement and the 4FB00 MANA connections at terminals 3 and 7.
- Use shielded twisted-pair voltage wiring and follow the conditional shield-grounding guidance.
- Observe the 2 V AC peak-to-peak input-to-MANA limit and documented ground-potential limits.
- Deactivate unused inputs and fit the exact 2AI U Standard jumpers shown in the original table.
- Use the supported station removal procedure; do not alter module coding as a substitute for compatibility checks.

02 ORIGINAL WIRING REFERENCE

Original source PDF pages 428, 2, 128, 129, 130, 131, 132, 402, 403, 404, 405, 413, 429, 430. The following pages retain the original Siemens drawings and printed page numbers.

Original Siemens documentation (third-party-hosted copy)

13.5 2AI U Standard analog electronic module (6ES7134-4FB00-0AB0)

Order number

6ES7134-4FB00-0AB0

Features

- 2 inputs for measuring voltage
- Input ranges:

  ± 10 V, resolution 13 bits + sign

  ± 5 V, resolution 13 bits + sign

  1 to 5 V, resolution 13 bits
- Isolated from the load voltage L+
- Permitted common-mode voltage 2 VAC_{pp}

Terminal assignment

The following table indicates the terminal assignment of the 2AI U Standard for the different terminal modules:

Table 13-36 Terminal assignment of the 2AI U Standard

View	Terminal assignment	Remarks
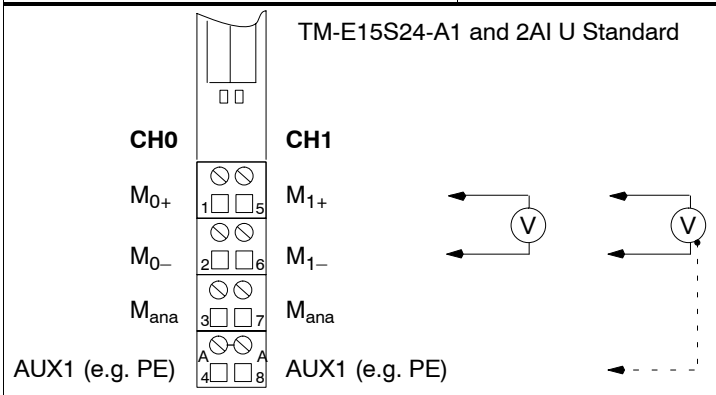		Channel 0: Terminals 1 to A4 Channel 1: Terminals 5 to A8 M+: Input signal “+” M–: Input signal “–” M_{ana}: Ground of the module

Safety Guidelines

This manual contains notices intended to ensure personal safety, as well as to protect the products and connected equipment against damage. These notices are highlighted by the symbols shown below and graded according to severity by the following texts:

Danger

indicates that death, severe personal injury or substantial property damage will result if proper precautions are not taken.

Warning

indicates that death, severe personal injury or substantial property damage can result if proper precautions are not taken.

Caution

indicates that minor personal injury can result if proper precautions are not taken.

Caution

indicates that property damage can result if proper precautions are not taken.

Notice

draws your attention to particularly important information on the product, handling the product, or to a particular part of the documentation.

Qualified Personnel

Only **qualified personnel** should be allowed to install and work on this equipment. Qualified persons are defined as persons who are authorized to commission, to ground and to tag circuits, equipment, and systems in accordance with established safety practices and standards.

Correct Usage

Note the following:

Warning

This device and its components may only be used for the applications described in the catalog or the technical description, and only in connection with devices or components from other manufacturers which have been approved or recommended by Siemens.

This product can only function correctly and safely if it is transported, stored, set up, and installed correctly, and operated and maintained as recommended.

Trademarks

SIMATIC®, SIMATIC HMI® and SIMATIC NET® are registered trademarks of SIEMENS AG.

Third parties using for their own purposes any other names in this document which refer to trademarks might infringe upon the rights of the trademark owners.

Copyright © Siemens AG 1998-2003 All rights reserved

The reproduction, transmission or use of this document or its contents is not permitted without express written authority. Offenders will be liable for damages. All rights, including rights created by patent grant or registration of a utility model or design, are reserved.

Siemens AG
Bereich Automation and Drives
Geschaeftsgebiet Industrial Automation Systems
Postfach 4848, D- 90327 Nuernberg

Disclaim of Liability

We have checked the contents of this manual for agreement with the hardware and software described. Since deviations cannot be precluded entirely, we cannot guarantee full agreement. However, the data in this manual are reviewed regularly and any necessary corrections included in subsequent editions. Suggestions for improvement are welcomed.

© Siemens AG 2003
Technical data subject to change.

Caution

Do not look directly into the opening of the transmission diodes.
The light beam that comes out could damage your eyes.

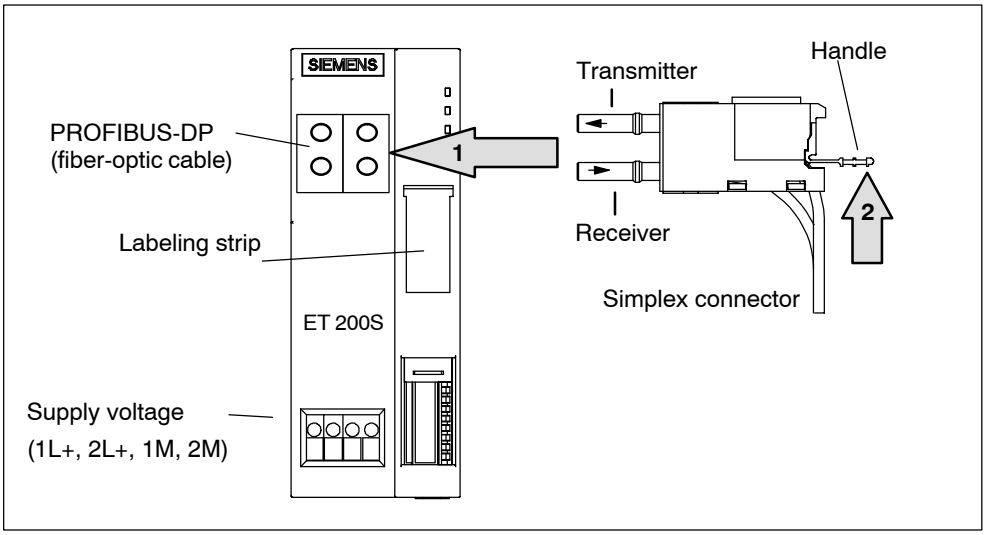

Figure 5-13 Wiring the IM151-1 FO STANDARD

5.5 Inserting and identifying the electronic modules

Features

- The electronic modules are inserted in the terminal modules.
- A labeling strip allows you to identify the electronic modules.
- Electronic modules are:
  - Self-coding
  - Type-coded

  The first time you insert an electronic module, a code element engages on the terminal module. This mechanically prevents the wrong electronic module from being inserted.

Requirements

Adhere to the rules below for inserting electronic modules. See Section 3.5 (The electronic modules you can use on the various terminal modules).

Inserting and identifying the electronic modules

1. Insert the electronic module in the terminal module until you hear it snap into place.
2. Pull the labeling strip up out of the electronic module in order to identify it.
3. Then put the labeling strip back into the electronic module.

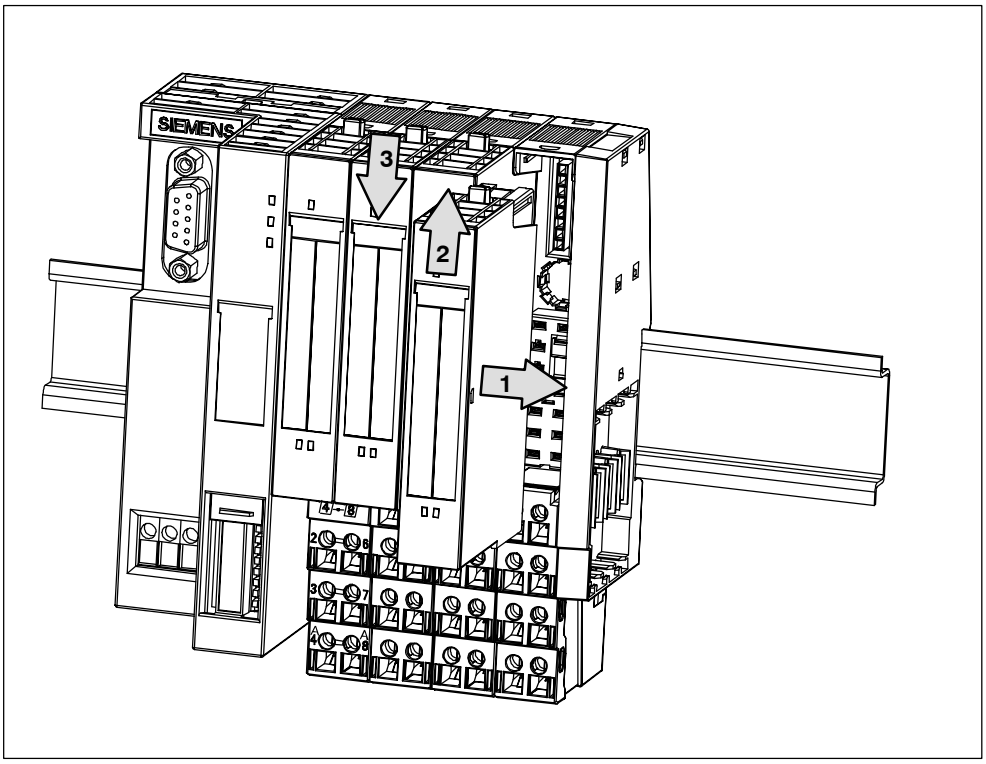

Figure 5-14 Inserting and identifying electronic modules

Removing electronic modules

1. Simultaneously press the two release buttons on the top and bottom of the electronic module.
2. Pull the electronic module out from the terminal module at the front.

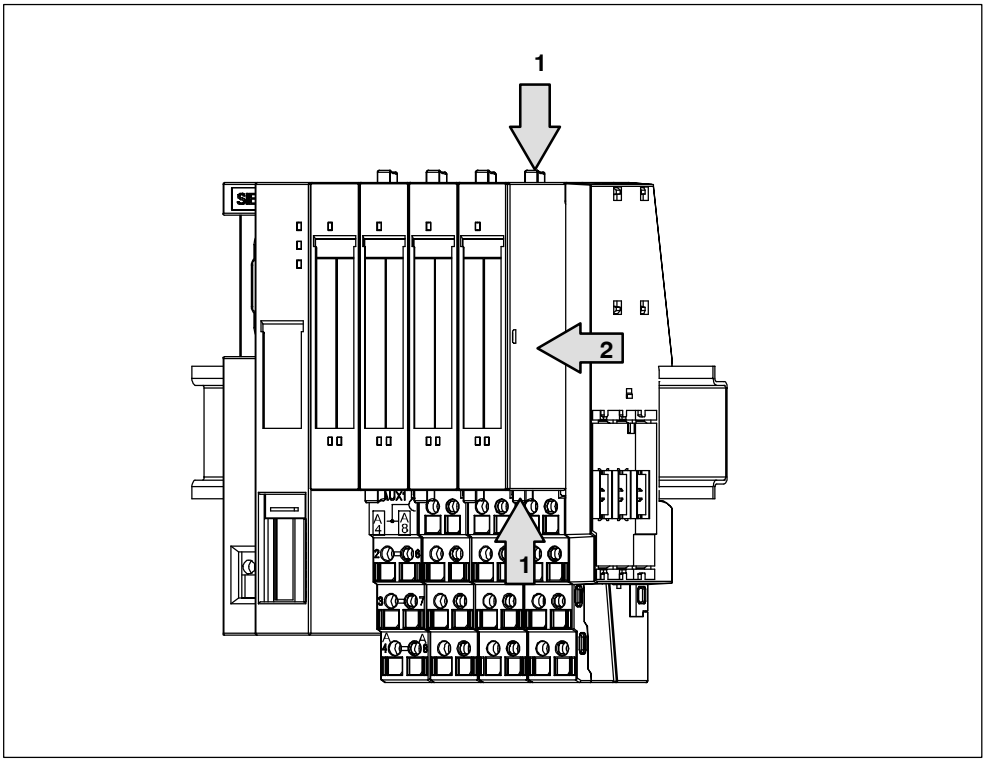

Figure 5-15 Removing electronic modules

Changing the type of an electronic module

You have already removed the electronic module:

1. Use a screwdriver to push the code element out of the terminal module.
2. Put the code element on the used electronic module again.
3. Insert the new electronic module (different type) in the terminal module until you hear it snap into place.
4. Identify the new electronic module.

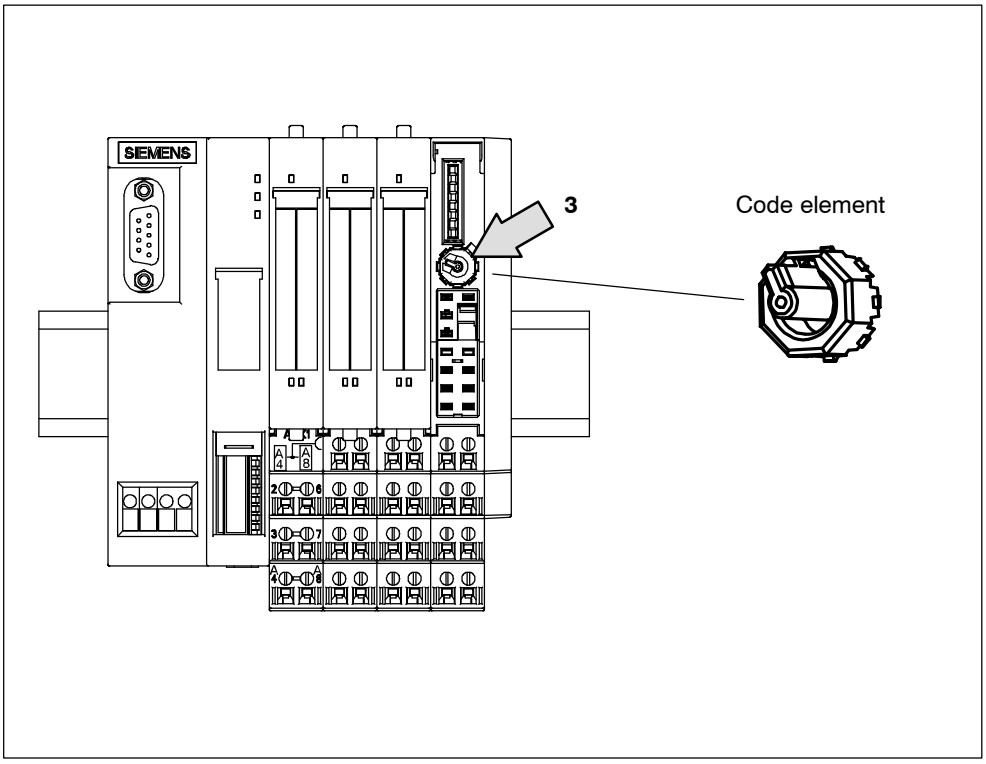

Figure 5-16 Removing the code element

Warning

When you make changes to the code, it can lead to dangerous states in your system.

Replacing a defective electronic module

You have already removed the electronic module:

1. Remove the code element from bottom of the new electronic module.
2. Insert the new electronic module (same type) in the terminal module until you hear it snap into place.
3. Identify the new electronic module.

Removing and inserting electronic modules during operation

ET 200S supports the removal and insertion of modules during operation (during the RUN operating mode). The ET 200S remains in RUN mode when an electronic module is removed. The protective conductor connections of the ET 200S are not interrupted.

Note

- You cannot remove and insert modules during operation unless the corresponding parameters have been assigned. See Section 9.1.
- You can remove and insert modules during operation as of the IM151-1 BASIC, IM151-1 STANDARD (6ES7 151-1AA01-0AB0), IM151-1 FO STANDARD, and IM151-1 HIGH FEATURE.
- If **one** module is missing (gap) and the ET 200S is switched on, the station will not start up (see Section 6.6.10).
- The removal and insertion of modules affects the clocking (equidistance).

If you replace more than one module, only one gap can result.

The following table indicates which modules you can remove and insert under which conditions:

Table 5-1 Removing and inserting electronic modules

Modules	Removing and inserting	Conditions
Interface module	No	——
Power modules	Yes	The load voltage must be switched off.
Digital electronic modules (input)	Yes	——
Digital electronic modules (output)	Yes	The load voltage must be switched off by means of an external switch/fuse.
Analog electronic modules	Yes	——
4 IQ-SENSE	Yes	The sensors can also be replaced during operation. These are then parameterized automatically by the electronic module.

13.2 Fundamentals of analog value processing

13.2.1 Connecting measuring sensors

Introduction

You can connect different measuring sensors to the analog input modules, depending on the type of module involved:

- Voltage sensor
- Current sensors as:
  - Two-wire measuring transducer
  - Four-wire measuring transducer
- Resistance-type sensor

In this chapter you will find out how to connect the measuring sensors and what to watch for when doing so.

Lines for analog signals

You should use shielded and twisted-pair lines for the analog signals. This reduces the effect of interference. You should ground the shield of the analog lines at both ends of the line. If there are differences in potential between the ends of the line, a compensating current flows via the shield that can interfere with the analog signals. If this is the case, you should only ground the shield at one end of the line.

Analog input modules

In the case of the analog input modules there is electrical isolation:

- Between the logic circuitry and backplane bus
- Between the load voltage and the channels. The following differences exist:
  - No isolation: Connection between M_{ANA} and the central grounding point
  - Isolation: No connection between M_{ANA} and the central grounding point (U_{ISO})

Analog output modules

In the case of the analog output modules there is generally electrical isolation:

- Between the logic circuitry and backplane bus
- Between the load voltage and $M_{ANA.}$

Note

Ensure that this potential difference (U_{ISO}) does not exceed the permitted value. If there is a possibility of exceeding the permitted value, make a connection between terminal M_{ANA} and the central grounding point.

Connecting measuring sensors to analog inputs

Between the measuring lines M– of the input channels and the reference point of the measuring circuit M_{ANA} there can be only a limited potential difference U_{CM} (common-mode voltage). To ensure that the permitted value is not exceeded, you must take different steps depending on the whether the sensors are isolated or non-isolated. The steps you have to take are described in this chapter.

Generally speaking, however, when connecting two-wire measuring transducers for current measurement and when connecting resistance-type sensors, you should not make a connection from M– to M_{ANA}. This also applies to correspondingly parameterized but unused inputs.

Note

For the analog input modules 2AI U, 2AI RTD, and 2AI TC, you must short-circuit unused analog inputs.

Abbreviations used

The meanings of the abbreviations in the figures below are as follows:

M +:	Measuring line (positive)
M –:	Measuring line (negative)
M_{ANA}:	Reference potential of the analog measuring circuit
M:	Frame connection
L +:	Rated load voltage 24 VDC
U_{CM}:	Potential difference between inputs and reference potential of the measuring circuit M_{ANA}
U_{ISO}:	Potential difference between M_{ANA} and the central grounding point

Isolated measuring sensors

The isolated measuring sensors are not connected to the local ground potential. They can be floating. Depending on local conditions or interference, potential differences U_{CM} (static or dynamic) can occur between the measuring lines M– of the input channels and the reference point of the measuring circuit M_{ANA}.

To ensure that the permitted value for U_{CM} is not exceeded in environments with strong EMC interference, the following applies:

- In the case of the analog input modules 2AI U, 2AI I 4WIRE, and 2AI TC: Connect M– to M_{ANA}.
- When connecting two-wire measuring transducers for current measurement and when connecting resistance-type sensors, you must not connect M– to M_{ANA}.

Isolated measuring sensors (continued)

Figure 13-1 illustrates the connection of isolated measuring sensors to the floating analog input modules.

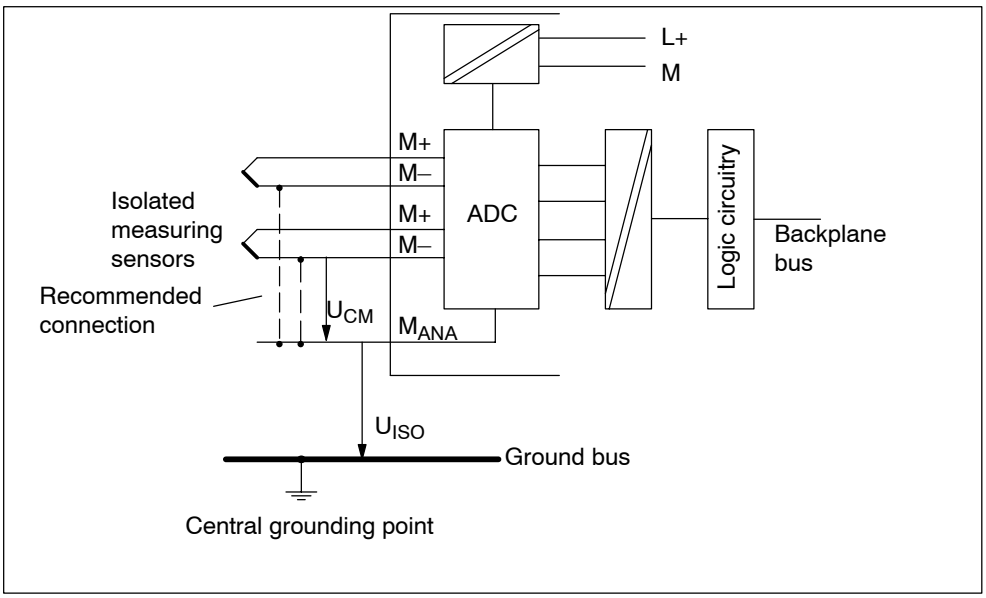

Figure 13-1 Connection of isolated measuring sensors to a floating analog input module

Non-isolated measuring sensors

The non-isolated measuring sensors are connected to the local ground potential. You must connect M_{ANA} to the ground potential. Depending on local conditions or interference, potential differences U_{CM} (static or dynamic) can occur between the locally distributed measuring points.

If the permitted value for U_{CM} is exceeded, there must be equalizing lines between the measuring points.

Figure 13-2 illustrates the connection of non-isolated measuring sensors to a floating analog input module.

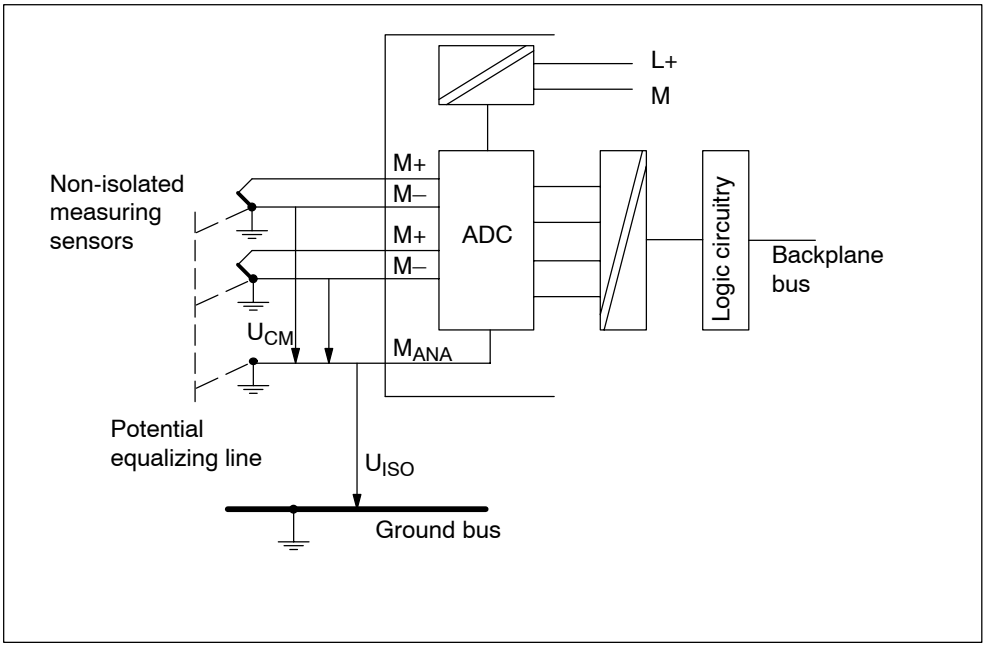

Figure 13-2 Connection of non-isolated measuring sensors to a floating analog input module

Operating four-wire measuring transducers on an external voltage supply

If there is isolation between the output and the supply of the measuring transducer, you can connect it to the 2AI I 4WIRE without additional connections.

If there is no isolation between the output and the supply of the measuring transducer, you can connect it to the 2AI I 4WIRE only if the reference potential of the power supply voltages (24 VDC) is the same.

If there is an increase in interference radiation, a connection between M– and M_{ana} on the terminal module of the 2AI I 4WIRE is recommended.

13.2.3 Notes on and circuits of unused channels of the analog input modules

- Deactivate unused input channels during parameter assignment.
- A deactivated channel always returns a value of $7FFF_H$.
- In the case of the standard modules 2AI U, 2AI I 2WIRE, 2AI I 4WIRE, 2AI RTD Standard, 2AI RTD High Feature, 2AI TC Standard, and 2AI TC High Feature, the cycle time of the module is halved.
- In the case of the high-speed modules 2AI U, 2AI I 2WIRE, and 2AI I 4WIRE, the cycle time remains unchanged at 1 ms.
- To adhere to the permissible potential differences (U_{CM}), you must wire jumpers on the terminal module for the unused channels. This is necessary in the case of the following modules:

Analog input module	TM terminal							
	Channel 0				Channel 1			
	1	2	3	4	5	6	7	8
2AI U Standard	●	●	●		●	●	●	
2AI RTD Standard, 2AI RTD High Feature, 2AI TC High Feature	●	●			●	●		
2AI TC Standard	●	●	●		●	●	●	
2AI U High Speed	●	●	●		●	●	●	

Table 13-36 Terminal assignment of the 2AI U Standard

View	Terminal assignment	Remarks
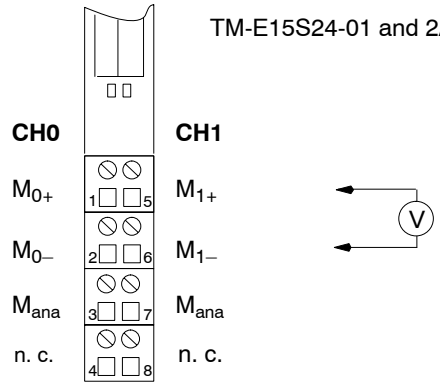		Channel 0: Terminals 1 to 4 Channel 1: Terminals 5 to 8 M+: Input signal “+” M–: Input signal “–” M_{ana}: Ground of the module Terminals 4 and 8 can be used for unneeded wires of up to 30 VDC.
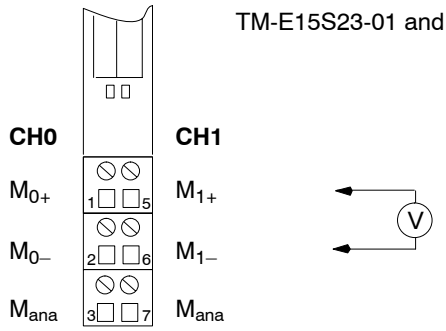		Channel 0: Terminals 1 to 3 Channel 1: Terminals 5 to 7 M+: Input signal “+” M–: Input signal “–” M_{ana}: Ground of the module
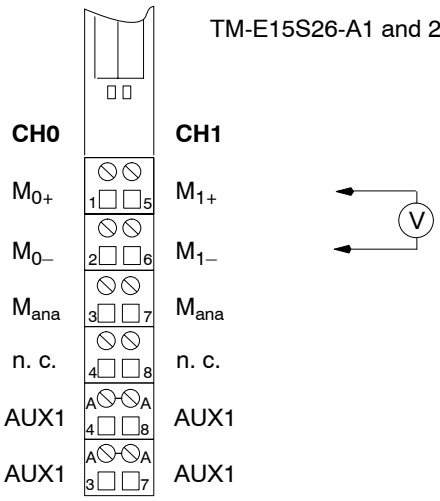		Channel 0: Terminals 1 to A3 Channel 1: Terminals 5 to A7 M+: Input signal “+” M–: Input signal “–” M_{ana}: Ground of the module Terminals 4 and 8 can be used for unneeded wires of up to 30 VDC.

Block diagram

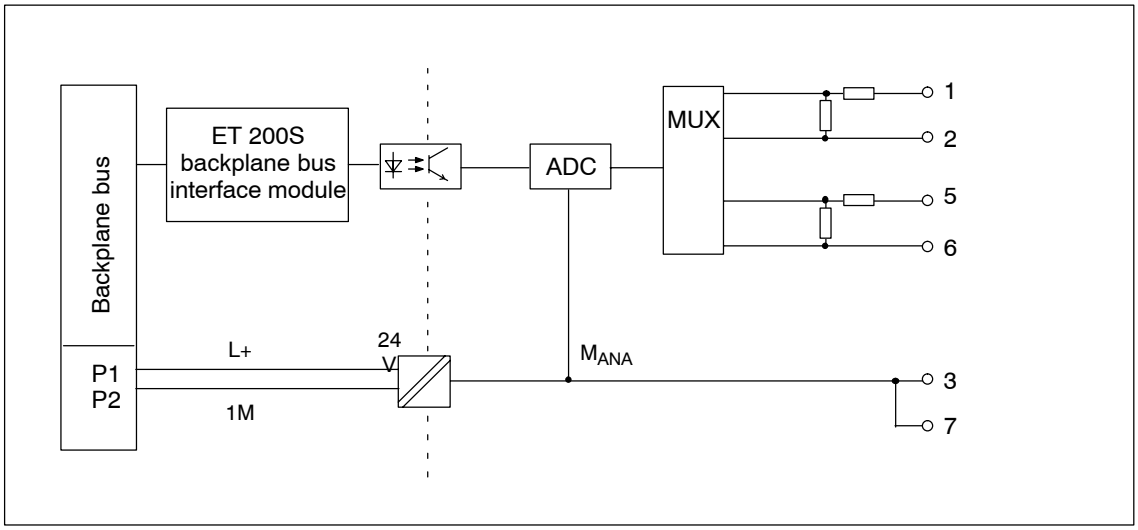

Figure 13-7 Block diagram of the 2AI U Standard

Technical specifications

Dimensions and weight	
Dimensions W × H × D (mm)	15 x 81 x 52
Weight	Approx. 40 g
Data for specific modules	
Supports clocked operation	No
Number of inputs	2
Length of cable	
• Shielded	Max. 200 m
Voltages, currents, potentials	
Rated load voltage L+ (from the power module)	24 VDC
• Reverse polarity protection	Yes
Isolation	
• Between the channels and backplane bus	Yes
• Between the channels and load voltage L+	Yes
• Between the channels	No

Permissible potential difference	
• Between inputs and M_{ANA} (U_{CM})	2 VAC_{pp}
• Between M_{ANA} and the central grounding point (U_{ISO})	75 VDC/60 VAC
Insulation tested	500 VDC
Current consumption	
• From load voltage L+	Max. 30 mA
Power dissipation of the module	Typ. 0.6 W
Status, interrupts, diagnostics	
Diagnostic functions	
• Group error	Red “SF” LED
• Diagnostic functions readable	Yes