MANUFACTURER DOCUMENT PACKAGE

Manufacturer's Manual

Selected official pages for procurement and maintenance review

PRODUCT BRAND

Siemens

PRODUCT MODEL

6ES7135-4GB00-0AB0

ET 200S Current Output Module. Relevant section pages: 128, 129, 130, 131, 132, 424, 489, 490, 491, 492. Adjacent model text on shared pages is outside this product reference.

OFFICIAL SOURCE

ET 200S Distributed I/O System; 07/2003, EWA-4NEB780602402-09

Source: Siemens 07/2003, EWA-4NEB780602402-09. Original manufacturer pages follow this cover.

Selected original Siemens 07/2003 manual, archived by a third party. Exact section 13.19 covers 6ES7135-4GB00-0AB0. Shared pages also describe other modules; only current-output Standard entries apply here.

AMIKON PRODUCT SUPPORT

+86-18020776786 INFO@AMIKON.CN

AMIKONG.COM

Amikon Limited prepared this independent reference package. Selected manufacturer pages follow with their original content and pagination visible.

SIEMENS

SIMATIC

ET 200S
Distributed I/O System

Manual

The following supplement is part of this documentation:

No.	Designation	Drawing number	Edition
1	Product information	A5E00060322-10	07/2003

This manual is part of the documentation package with the order number
6ES7151-1AA00-8BA0

Edition 07/2003
EWA-4NEB780602402-09

Preface, Contents
1 Product Overview
2 Brief Instructions on Commissioning ET 200S
3 Configuration Options
4 Installation
5 Wiring and Fitting
6 Commissioning and Diagnostics
7 General Technical Specifications
8 ET 200S Power Supply
9 Interface Modules
10 Terminal Modules
11 Power Modules
12 Digital Electronic Modules
13 Analog Electronic Modules
14 4 IQ-SENSE
15 RESERVE Modules

Appendices

Glossary, Index

Safety Guidelines

This manual contains notices intended to ensure personal safety, as well as to protect the products and connected equipment against damage. These notices are highlighted by the symbols shown below and graded according to severity by the following texts:

Danger

indicates that death, severe personal injury or substantial property damage will result if proper precautions are not taken.

Warning

indicates that death, severe personal injury or substantial property damage can result if proper precautions are not taken.

Caution

indicates that minor personal injury can result if proper precautions are not taken.

Caution

indicates that property damage can result if proper precautions are not taken.

Notice

draws your attention to particularly important information on the product, handling the product, or to a particular part of the documentation.

Qualified Personnel

Only **qualified personnel** should be allowed to install and work on this equipment. Qualified persons are defined as persons who are authorized to commission, to ground and to tag circuits, equipment, and systems in accordance with established safety practices and standards.

Correct Usage

Note the following:

Warning

This device and its components may only be used for the applications described in the catalog or the technical description, and only in connection with devices or components from other manufacturers which have been approved or recommended by Siemens.

This product can only function correctly and safely if it is transported, stored, set up, and installed correctly, and operated and maintained as recommended.

Trademarks

SIMATIC®, SIMATIC HMI® and SIMATIC NET® are registered trademarks of SIEMENS AG.

Third parties using for their own purposes any other names in this document which refer to trademarks might infringe upon the rights of the trademark owners.

Copyright © Siemens AG 1998-2003 All rights reserved

The reproduction, transmission or use of this document or its contents is not permitted without express written authority. Offenders will be liable for damages. All rights, including rights created by patent grant or registration of a utility model or design, are reserved.

Siemens AG
Bereich Automation and Drives
Geschaeftsgebiet Industrial Automation Systems
Postfach 4848, D- 90327 Nuernberg

Disclaim of Liability

We have checked the contents of this manual for agreement with the hardware and software described. Since deviations cannot be precluded entirely, we cannot guarantee full agreement. However, the data in this manual are reviewed regularly and any necessary corrections included in subsequent editions. Suggestions for improvement are welcomed.

© Siemens AG 2003
Technical data subject to change.

Preface

Purpose of the manual

The information in this manual enables you to run the ET 200S distributed I/O system on PROFIBUS-DP as a DP slave.

Required level of knowledge

Knowledge of the field of automation engineering is required to understand the manual.

Scope of the manual

This manual is valid for the components of the ET 200S distributed I/O system specified in Appendix A.

This manual contains a description of the components that were valid at the time the manual was published. We reserve the right to enclose a Product Information bulletin containing up-to-date information about new components and new versions of components.

Changes since the previous version

The following changes/additions have been made since the previous version of the manual:

- New function: option handling
- New ET 200S Power Supply module
- New PM-E 24–48 VDC power module
- New 4 DI NAMUR electronic module
- Changes to the IM151-1 STANDARD and IM151-1 FO STANDARD interface modules

Caution

Do not look directly into the opening of the transmission diodes.
The light beam that comes out could damage your eyes.

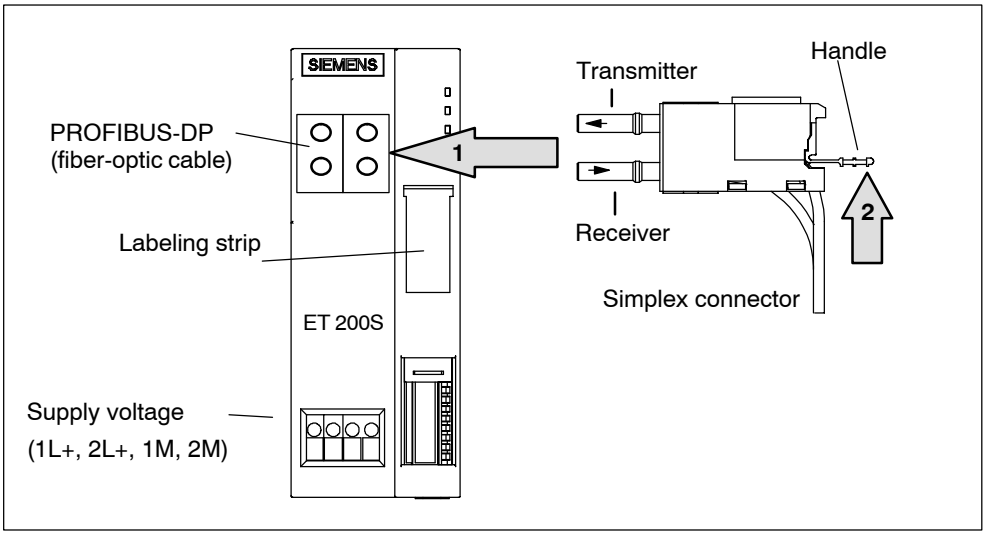

Figure 5-13 Wiring the IM151-1 FO STANDARD

5.5 Inserting and identifying the electronic modules

Features

- The electronic modules are inserted in the terminal modules.
- A labeling strip allows you to identify the electronic modules.
- Electronic modules are:
  - Self-coding
  - Type-coded

  The first time you insert an electronic module, a code element engages on the terminal module. This mechanically prevents the wrong electronic module from being inserted.

Requirements

Adhere to the rules below for inserting electronic modules. See Section 3.5 (The electronic modules you can use on the various terminal modules).

Inserting and identifying the electronic modules

1. Insert the electronic module in the terminal module until you hear it snap into place.
2. Pull the labeling strip up out of the electronic module in order to identify it.
3. Then put the labeling strip back into the electronic module.

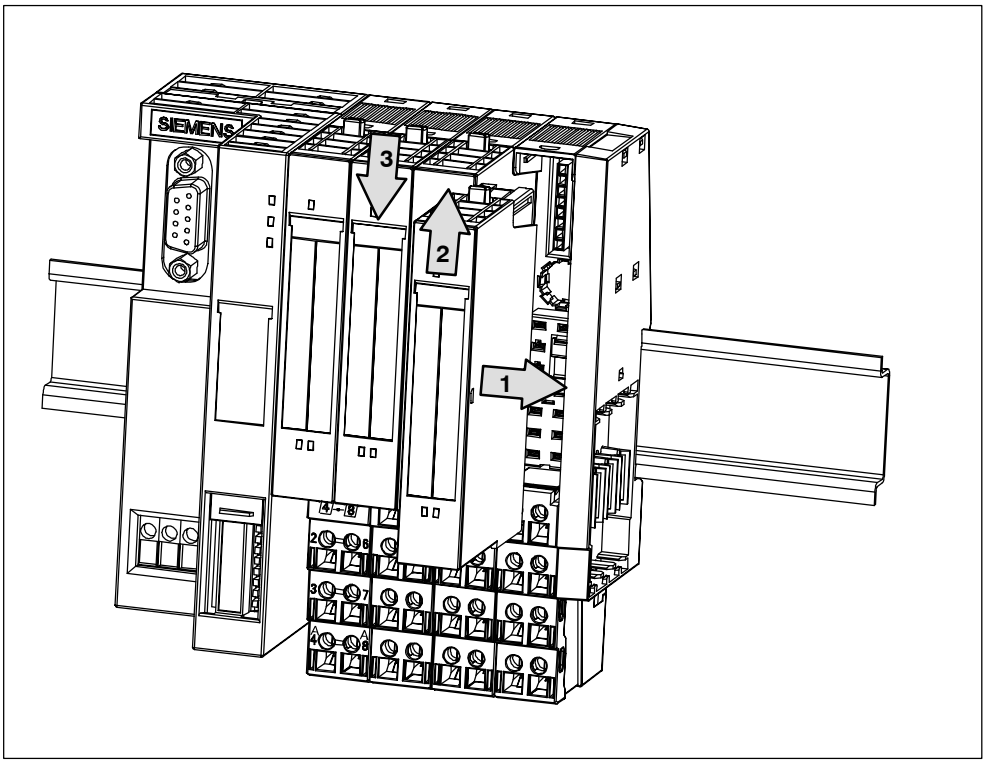

Figure 5-14 Inserting and identifying electronic modules

Removing electronic modules

1. Simultaneously press the two release buttons on the top and bottom of the electronic module.
2. Pull the electronic module out from the terminal module at the front.

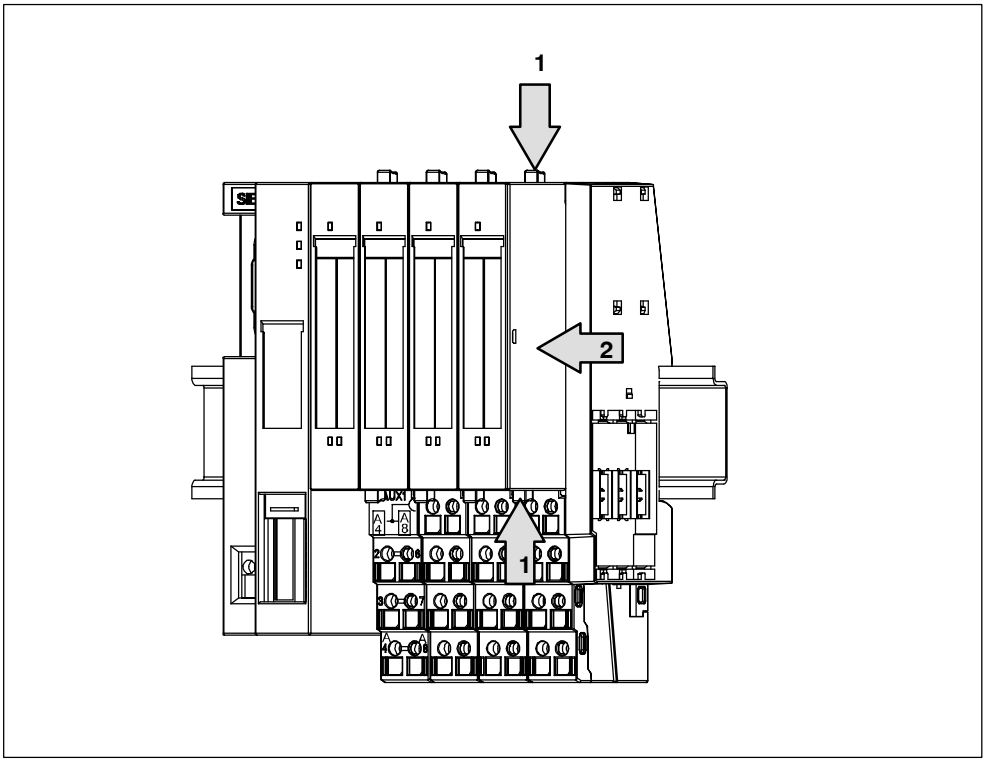

Figure 5-15 Removing electronic modules

Changing the type of an electronic module

You have already removed the electronic module:

1. Use a screwdriver to push the code element out of the terminal module.
2. Put the code element on the used electronic module again.
3. Insert the new electronic module (different type) in the terminal module until you hear it snap into place.
4. Identify the new electronic module.

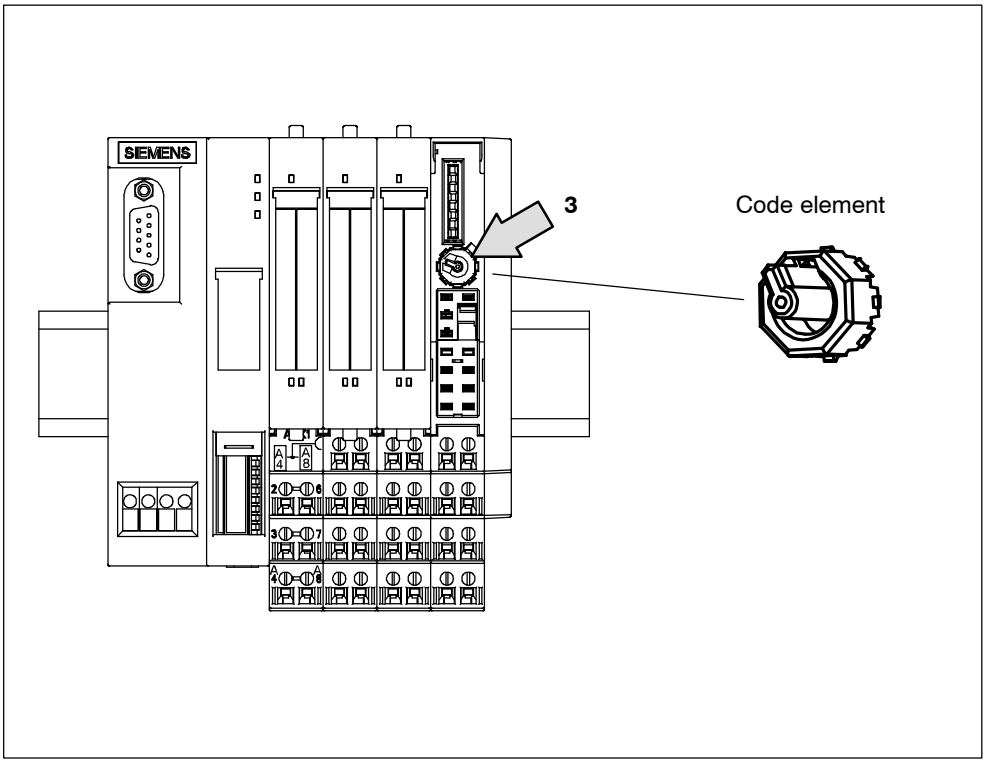

Figure 5-16 Removing the code element

Warning

When you make changes to the code, it can lead to dangerous states in your system.

Replacing a defective electronic module

You have already removed the electronic module:

1. Remove the code element from bottom of the new electronic module.
2. Insert the new electronic module (same type) in the terminal module until you hear it snap into place.
3. Identify the new electronic module.

Removing and inserting electronic modules during operation

ET 200S supports the removal and insertion of modules during operation (during the RUN operating mode). The ET 200S remains in RUN mode when an electronic module is removed. The protective conductor connections of the ET 200S are not interrupted.

Note

- You cannot remove and insert modules during operation unless the corresponding parameters have been assigned. See Section 9.1.
- You can remove and insert modules during operation as of the IM151-1 BASIC, IM151-1 STANDARD (6ES7 151-1AA01-0AB0), IM151-1 FO STANDARD, and IM151-1 HIGH FEATURE.
- If **one** module is missing (gap) and the ET 200S is switched on, the station will not start up (see Section 6.6.10).
- The removal and insertion of modules affects the clocking (equidistance).

If you replace more than one module, only one gap can result.

The following table indicates which modules you can remove and insert under which conditions:

Table 5-1 Removing and inserting electronic modules

Modules	Removing and inserting	Conditions
Interface module	No	——
Power modules	Yes	The load voltage must be switched off.
Digital electronic modules (input)	Yes	——
Digital electronic modules (output)	Yes	The load voltage must be switched off by means of an external switch/fuse.
Analog electronic modules	Yes	——
4 IQ-SENSE	Yes	The sensors can also be replaced during operation. These are then parameterized automatically by the electronic module.

Temperature coefficient

The correction factor for the temperature coefficient (α value) specifies how much the resistance of a certain material changes when the temperature is raised by 1°C.

The temperature coefficient depends on the chemical composition of the material. Only one value is used in Europe for each type of sensor (default value).

Additional values enable you to make a sensor-specific setting for the temperature coefficient, therefore ensuring more accuracy.

Parameters for

- 2AO U Standard, 2AO U High Feature analog electronic module
- 2AO I Standard, 2AO I High Feature analog electronic module

Table 13-35 Parameters for analog output modules U, I

2AO U Standard, 2AO U High Feature	2AO I Standard, 2AO I High Feature	Value range	Default	Applicability
Group diagnosis (parameter assignment error, internal error)		• Disable • Enable	Disable	Module
Diagnostics: Short-circuit to M	——	• Disable • Enable	Disable	Channel
——	Diagnostics: Wire break	• Disable • Enable	Disable	Channel
Reaction to CPU-/master-STOP		• Output de-energized • Substitute a value • Keep last value	Output de-energized	Module
Type/range of output	——	• Deactivated • 1 to 5 V • ± 10 V	±10 V	Channel
——	Type/range of output	• Deactivated • 4 to 20 mA • ± 20 mA	4 to 20 mA	Channel
Substitute value [1]		0 to 65535 (value range must be inside the rated range)	±10 V/±20 V: 0 V 4 to 20 mA: 4 mA 1 to 5 V: 1 V	Channel

[1] If there is no voltage going to the IM but the supply to the analog output modules continues, the parameterized substitute values are output. Substitute values must be within the nominal range. You can assign as parameters values from –27648 to +27648 (in the case of parameter assignment by means of the device database file).

13.19 2AO I Standard analog electronic module (6ES7135-4GB00-0AB0)

Order number

6ES7135-4GB00-0AB0

Features

- 2 outputs for current output
- Output range:
  - ± 20 mA, resolution 13 bits + sign
  - 4 to 20 mA, resolution 13 bits
- Isolated from the load voltage L+

Terminal assignment

The following table indicates the terminal assignment of the 2AO I Standard for the different terminal modules:

Table 13-50 Terminal assignment of the 2AO I Standard

View	Terminal assignment	Remarks
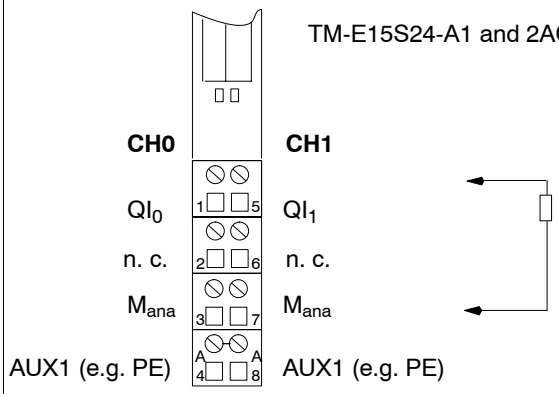	TM-E15S24-A1 and 2AO I Standard	Channel 0: Terminals 1 to A4 Channel 1: Terminals 5 to A8 QI: Analog output current M_{ana}: Ground of the module Terminals 2 and 6 can be used for unneeded wires of up to 30 VDC.

Table 13-50 Terminal assignment of the 2AO I Standard, continued

View	Terminal assignment	Remarks
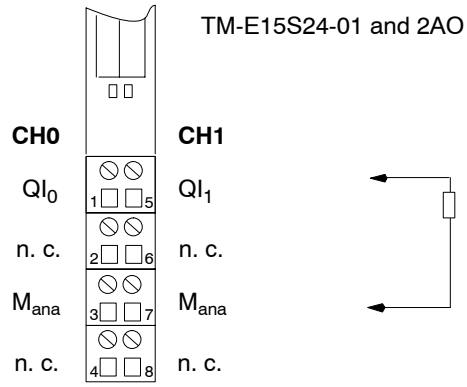		Channel 0: Terminals 1 to 4 Channel 1: Terminals 5 to 8 QI: Analog output current M_{ana}: Ground of the module Terminals 2 and 6 and 4 and 8 can be used for unneeded wires of up to 30 VDC.
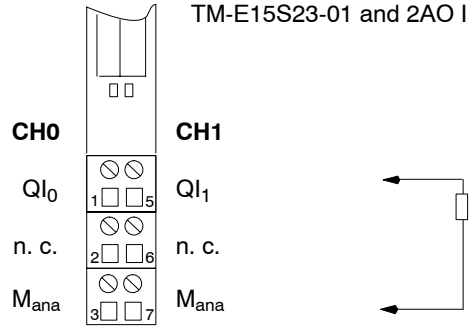		Channel 0: Terminals 1 to 3 Channel 1: Terminals 5 to 7 QI: Analog output current M_{ana}: Ground of the module Terminals 2 and 6 can be used for unneeded wires of up to 30 VDC.
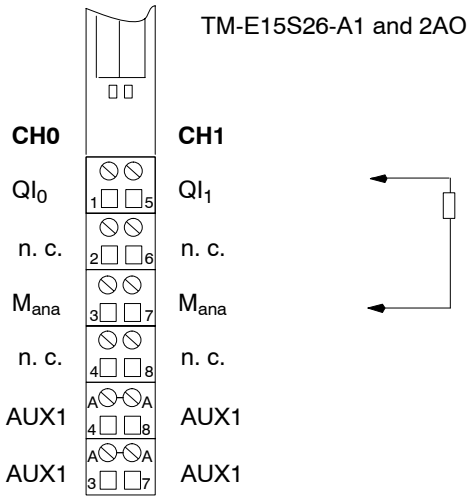		Channel 0: Terminals 1 to A3 Channel 1: Terminals 5 to A7 QI: Analog output current M_{ana}: Ground of the module Terminals 2 and 6 and 4 and 8 can be used for unneeded wires of up to 30 VDC.

Block diagram

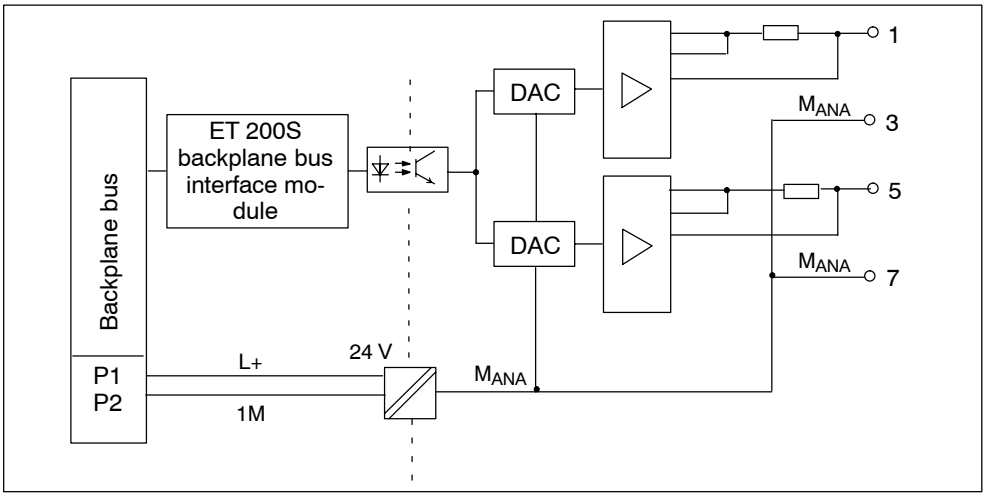

Figure 13-21 Block diagram of the 2AO I Standard

Technical specifications

Dimensions and weight	
Dimensions W × H × D (mm)	15 x 81 x 52
Weight	Approx. 40 g
Data for specific modules	
Supports clocked operation	No
Number of outputs	2
Length of cable	
• Shielded	Max. 200 m
Voltages, currents, potentials	
Rated load voltage L+ (from the power module)	24 VDC
• Reverse polarity protection	Yes
Isolation	
• Between the channels and backplane bus	Yes
• Between the channels and load voltage	Yes
• Between the channels	No
Permissible potential difference	
• Between M_{ANA} and the central grounding point (U_{ISO})	75 VDC/60 VAC
Insulation tested	500 VDC
Current consumption	
• From the power supply L+	Max. 150 mA
Power dissipation of the module	Max. 2 W
Status, Interrupts, Diagnostics	
Diagnostic functions	
• Group error	Red “SF” LED
• Diagnostic functions readable	Yes
Analog value generation	
Resolution (including overrange)	± 20 mA/13 bits + sign 4 to 20 mA/13 bits
Cycle time	Max. 1.5 ms

Settling time	
• For resistive load	0.1 ms
• For capacitive load	0.5 ms
• For inductive load	0.5 ms
Substitute values can be applied	Yes
Suppression of interference, limits of error	
Crosstalk between the outputs	min. –40dB
Operational limit (in the entire temperature range, with reference to the output range)	± 0.5%
Basic error limit (operational limit at 25 °C with reference to output range)	± 0.3%
Temperature error (with reference to the output range)	± 0.01%/K
Linearity error (with reference to the output range)	± 0.02%
Repeatability (in steady state at 25 °C with reference to output range)	± 0.05%
Output ripple (with reference to output range, bandwidth 0 to 50 kHz)	± 0.02%
Data for selecting an actuator	
Output range (rated value)	± 20 mA 4 to 20 mA
Load resistance	Max. 500 Ω
• For inductive load	1 mH
• No-load voltage	18 V
Destruction limit against voltages/currents applied from outside	
• Voltage at the outputs to M_{ANA}	Max. 15 V continuous; 75 V for max. 1 s (pulse duty factor 1:20)
• Current	Max. DC 50 mA
Connection of actuators	
• Two-conductor connection	Yes
• Four-conductor connection	No