MANUFACTURER DOCUMENT PACKAGE

Manufacturer's Manual

Selected official pages for procurement and maintenance review

PRODUCT BRAND

Siemens

PRODUCT MODEL

6ES7135-4FB01-0AB0

ET 200S Standard Voltage Output. Relevant section pages: 7, 8, 9, 10, 11, 13, 14, 15, 16, 17, 18, 19. Adjacent model text on shared pages is outside this product reference.

OFFICIAL SOURCE

2AO U ST analog electronic module (6ES7135-4FB01-0AB0); 04/2007, A5E01076916-01

Siemens original documentation and product reference

Original Siemens 04/2007 module manual A5E01076916-01. Read with the ET 200S system operating instructions. The exact voltage-output specification governs; generic adjacent wording does not add current-output capability.

AMIKON PRODUCT SUPPORT

+86-18020776786 INFO@AMIKON.CN

AMIKONG.COM

Amikon Limited prepared this independent reference package. Selected manufacturer pages follow with their original content and pagination visible.

SIEMENS

SIMATIC

ET 200S distributed I/O
2AO U ST analog electronic module
(6ES7135-4FB01-0AB0)

Manual

Preface

Properties 1

Parameters 2

Diagnostics 3

Analog value representation 4

Connecting 5

04/2007
A5E01076916-01

Safety Guidelines

This manual contains notices you have to observe in order to ensure your personal safety, as well as to prevent damage to property. The notices referring to your personal safety are highlighted in the manual by a safety alert symbol, notices referring only to property damage have no safety alert symbol. These notices shown below are graded according to the degree of danger.

⚠DANGER

indicates that death or severe personal injury **will** result if proper precautions are not taken.

⚠WARNING

indicates that death or severe personal injury **may** result if proper precautions are not taken.

⚠CAUTION

with a safety alert symbol, indicates that minor personal injury can result if proper precautions are not taken.

CAUTION

without a safety alert symbol, indicates that property damage can result if proper precautions are not taken.

NOTICE

indicates that an unintended result or situation can occur if the corresponding information is not taken into account.

If more than one degree of danger is present, the warning notice representing the highest degree of danger will be used. A notice warning of injury to persons with a safety alert symbol may also include a warning relating to property damage.

Qualified Personnel

The device/system may only be set up and used in conjunction with this documentation. Commissioning and operation of a device/system may only be performed by **qualified personnel**. Within the context of the safety notes in this documentation qualified persons are defined as persons who are authorized to commission, ground and label devices, systems and circuits in accordance with established safety practices and standards.

Prescribed Usage

Note the following:

⚠WARNING

This device may only be used for the applications described in the catalog or the technical description and only in connection with devices or components from other manufacturers which have been approved or recommended by Siemens. Correct, reliable operation of the product requires proper transport, storage, positioning and assembly as well as careful operation and maintenance.

Trademarks

All names identified by ® are registered trademarks of the Siemens AG. The remaining trademarks in this publication may be trademarks whose use by third parties for their own purposes could violate the rights of the owner.

Disclaimer of Liability

We have reviewed the contents of this publication to ensure consistency with the hardware and software described. Since variance cannot be precluded entirely, we cannot guarantee full consistency. However, the information in this publication is reviewed regularly and any necessary corrections are included in subsequent editions.

이 기기는 업무용(A급) 전자파 적합기기로서 판매자 또는 사용자는 이 점을 주의하시기 바라며 가정 외의 지역에서 사용하는 것을 목적으로 합니다.

Siemens AG
Automation and Drives
Postfach 48 48
90327 NÜRNBERG
GERMANY

Ordernumber: A5E01076916-01
℗ 09/2007

Copyright © Siemens AG 2007.
Technical data subject to change

Preface

Purpose of the manual

This manual supplements the *ET 200S Distributed I/O System* Operating Instructions. General functions for the ET 200S are described in the *ET 200S Distributed I/O System* Operating Instructions.

The information in this document along with the operating instructions enables you to commission the ET 200S.

Basic knowledge requirements

To understand these operating instructions you should have general knowledge of automation engineering.

Scope of the manual

This manual applies to this ET 200S module. It describes the components that are valid at the time of publication.

Recycling and disposal

Thanks to the fact that it is low in contaminants, this ET 200S module is recyclable. For environmentally compliant recycling and disposal of your electronic waste, please contact a company certified for the disposal of electronic waste.

Additional support

If you have any questions relating to the products described in these operating instructions, and do not find the answers in this document, please contact your local Siemens representative.

http://www.siemens.com/automation/partner

The portal to our technical documentation for the various SIMATIC products and systems is available at:

http://www.siemens.com/automation/simatic/portal

The online catalog and ordering system are available at:
http://www.siemens.com/automation/mall

Properties

1

1.1 2AO U ST analog electronic module (6ES7135-4FB01-0AB0)

Properties

- 2 outputs for voltage output
- Output range:
  - ± 10 V, resolution 13 bits + sign
  - 1 to 5 V, resolution 12 bits
- Isolated from the load voltage L+
- Extended temperature range from 0 to 50°C with vertical installation

General terminal assignment

Note

Terminals A4, A8, A3 and A7 are only available on certain terminal modules.

Terminal assignment for 2AO U ST (6ES7135-4FB01-0AB0)				
Terminal	**Assignment**	**Terminal**	**Assignment**	**Notes**
1	QV_0	**5**	QV_1	• QV_n: Analog output voltage, Channel n • S_{n+}: Tracer line positive, Channel n • S_{n-}: Tracer line negative, Channel n • M_{ana}: Ground of the module • AUX1: Protective-conductor terminal or potential bus (freely usable up to 230 VAC)
2	S_{0+}	**6**	S_{1+}	
3	M_{ana}	**7**	M_{ana}	
4	S_{0-}	**8**	S_{1-}	
A4	AUX1	**A8**	AUX1	
A3	AUX1	**A7**	AUX1	

Usable terminal modules

Usable terminal modules for 2AO U ST (6ES7135-4FB01-0AB0)		
TM-E15C26-A1 (6ES7193-4CA50-0AA0)	TM-E15C24-01 (6ES7193-4CB30-0AA0)	← Spring terminal
TM-E15S26-A1 (6ES7193-4CA40-0AA0)	TM-E15S24-01 (6ES7193-4CB20-0AA0)	← Screw-type terminal
TM-E15N26-A1 (6ES7193-4CA80-0AA0)	TM-E15N24-01 (6ES7193-4CB70-0AA0)	← Fast Connect
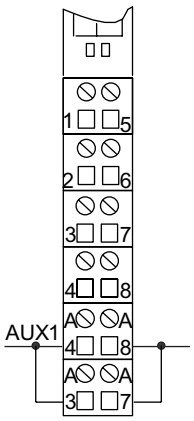	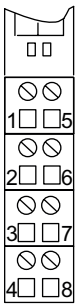	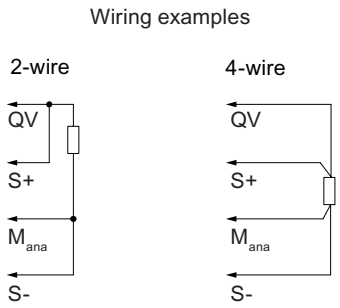

Block diagram

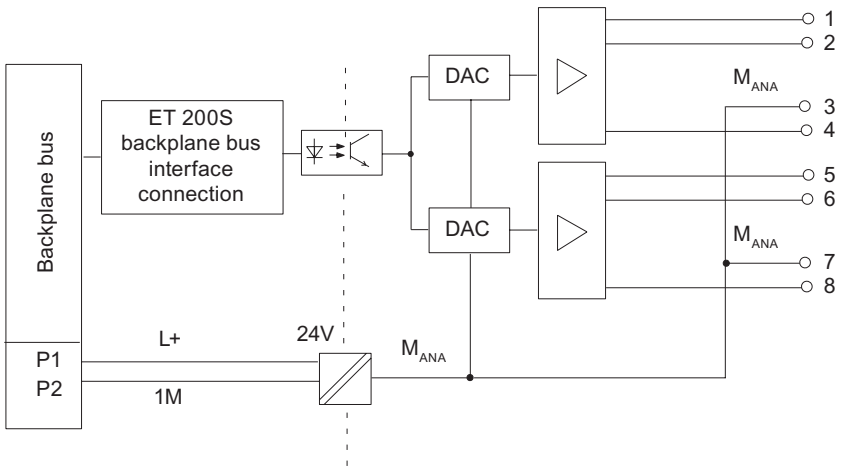

Figure 1-1 Block diagram of the 2AO U ST

2AO U ST technical specifications (6ES7135-4FB01-0AB0)

Dimensions and weight	
Width (mm)	15
Weight	Approx. 40 g
Module-specific data	
Supports isochronous operation	No
Number of outputs	2
Cable length	
• Shielded	Max. 200 m
Parameter length	7 bytes
Address space	4 bytes
Voltages, currents, potentials	
Rated load voltage L+ (from the power module)	24 VDC
• Reverse polarity protection	Yes
Electrical isolation	
• Between the channels and backplane bus	Yes
• Between the channels and load voltage L+	Yes
• Between the channels	No
Permissible potential difference	
• Between MANA and the central grounding point (U_{iso})	75 VDC / 60 VAC
Insulation tested	500 VDC
Current consumption	
• From load voltage L+	Max. 130 mA
Power dissipation of the module	Max. 2 W
Status, interrupts, diagnostics	
Diagnostics function	
• Group error	Red "SF" LED
• Diagnostic functions readable	Yes
Analog value generation	
Resolution (including overshoot range)	± 10 V/13 bits + sign 1 V to 5 V/12 bits
Cycle time	Max. 1.5 ms
Settling time	
• For resistive load	0.1 ms
• For capacitive load	0.5 ms
• For inductive load	0.5 ms
Substitute value can be assigned parameters	Yes

Suppression of interference, limits of error	
Crosstalk between the outputs	Min. -40 dB
Operational limit (in the entire temperature range, with reference to the output range)	± 0,4 %
Basic error limit (operational limit at 25 °C with reference to output range)	± 0,2 %
Temperature error (with reference to the output range)	± 0.01 %/K
Linearity error (with reference to the output range)	± 0,02 %
Repeatability (in steady state at 25°C with reference to output range)	± 0,05 %
Output ripple (with reference to output range, bandwidth 0 to 50 kHz)	± 0,02 %
Data for selecting the actuator	
Output range (rated value)	± 10 V 1 V to 5 V
Load resistance	min. 1.0 kΩ
• For capacitive load	Max. 1 µF
• Short-circuit protection	Yes
• Short-circuit voltage	Approx. 25 mA
Destruction limit against voltages/currents applied from outside	
• Voltage at the outputs to M_{ANA}	Max. 15 V continuous; 75 V for max. 1 ms (sampling ratio 1:20)
• Current	Max. 50 mA DC
Connection of actuators	
• Two-wire connection	Possible, without compensation of cable resistance
• Four-wire connection	Yes

Parameters

2

2.1 Parameters

Table 2-1 Parameters for analog output module

2AO U ST	Range of values	Default setting	Applicability
Group diagnostics (parameter assignment error, internal error)	• Disable • Enable	Disable	Module
Diagnostics: Short circuit to M [1]	• Disable • Enable	Disable	Channel
Response to CPU-/master-STOP	• No output current and voltage • Substitute a value • Keep last value	No output current and voltage	Module
Type/range of output	• Deactivated • 1 V to 5 V • ± 10 V	± 10 V	Channel
Substitute value [2]	To 65,535 (value range must lie within the nominal range)	± 10 V: 0 V 1 to 5 V: 1 V	Channel

[1] No diagnostics detection between -0.296 V and +0.296 V

[2] If there is no voltage being supplied to the interface module or COMPACT module but the supply to the analog output modules continues, the substitute values that have been assigned parameters are output. Substitute values must be within the nominal range. You can assign values from -27648 to +27648 as parameters (when assigning parameters using the GSD file).

Diagnostics

3

3.1 Diagnostics using LED display

LED display

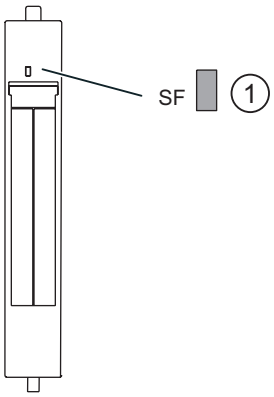

① Batch error (red)

Status and error displays

Event (LED)	Cause	Remedy
SF		
On	No configuration or incorrect module plugged in. No load voltage.present There is a diagnostic message.	Check the parameter assignment. Check the load voltage. Evaluate the diagnostics.

3.2 Error types

Analog output module error types

Table 3-1 Error types

Error type		Meaning	Remedy
16_D	10000: Parameter assignment error	Module cannot use the parameter for the channel: Inserted module does not match the one configured. Incorrect parameter assignment.	Correct the configuration (align actual and set configuration). Correct the parameter assignment (wire break diagnostics only parameterized for the permitted measuring ranges).
9_D	01001: Error	Internal module error has occurred (diagnostic message on channel 0 applies to the entire module).	Replace the module.
1_D	00001: Short circuit	Short circuit of the final controlling element supply.	Correct the process wiring.

Analog value representation

4

4.1 Introduction

Electronic modules with analog outputs

With the electronic modules with analog outputs, digital values set by a controller can be converted to a corresponding analog signal (current) in an analog output module and used to control suitable actuators (setpoint input for speed controllers, temperature controllers and similar).

4.2 Analog value representation for measuring ranges with SIMATIC S7 with 2AO U HF

Analog value representation

With the same nominal range, the digitized analog value is the same for input and output values. Analog values are represented in two's complement.

The following table shows the analog value representation for the analog electronic modules.

Table 4-1 Analog value representation (SIMATIC S7 format)

Resolution	Analog value															
Bit number	15	14	13	12	11	10	9	8	7	6	5	4	3	2	1	0
Significance of the bits	S	2^{14}	2^{13}	2^{12}	2^{11}	2^{10}	2^{9}	2^{8}	2^{7}	2^{6}	2^{5}	2^{4}	2^{3}	2^{2}	2^{1}	2^{0}

Sign

The sign (S) of the analog value is always in bit number 15:

- "0" → +
- "1" → –

Output value

The following table shows the representation of the binary analog values and the corresponding decimal and hexadecimal representation of the units of the analog values.

The table below shows the 11, 12, 13, and 15-bit resolutions + sign. Each analog value is entered left-aligned in the ACCU. The bits marked with "x" are set to "0".

Table 4-2 Output values (SIMATIC S7 format)

Resolution in bits	Units		Analog value	
	Decimal	Hexadecimal	High byte	Low byte
11+S	16	10_H	S 0 0 0 0 0 0 0	0 0 1 x x x x
12+S	8	8_H	S 0 0 0 0 0 0 0	0 0 0 1 x x x
13+S	4	4_H	S 0 0 0 0 0 0 0	0 0 0 0 1 x x
15 + sign	1	1_H	S 0 0 0 0 0 0 0	0 0 0 0 0 0 1

4.3 Output ranges

Voltage output ranges: ±10 V

Table 4-3 SIMATIC S7 format: Output range ±10 V

Output range ± 10 V	Units		Range
	Decimal	Hexadecimal	
0	> 32511	> $7EFF_H$	Overflow
11,7589 : 10,0004	32511 : 27649	$7EFF_H$: $6C01_H$	Overshoot range
10,0000 7,5000 : - 7,5000 - 10,0000	27648 20736 : -20736 -27648	$6C00_H$ 5100_H : $AF00_H$ 9400_H	Nominal range
- 10,0004 : - 11,7589	-27649 : -32512	$93FF_H$: 8100_H	Underrange
0	< -32512	< 8100_H	Underflow

Voltage output ranges: 1 to 5 V

Table 4-4 SIMATIC S7 format: Output range 1 V to 5 V

Output range 1 to 5 V	Units		Range
	Decimal	Hexadecimal	
0	> 32511	> $7EFF_H$	Overflow
5,7000 : 5,0002	32511 : 27649	$7EFF_H$: $6C01_H$	Overshoot range
5,0000 : 1,0000	27648 : 0	$6C00_H$: 0_H	Nominal range
0,9998 : 0	-1 : -6912	$FFFF_H$: $E500_H$	Underrange
0	< -6913	< $E4FF_H$	Underflow

4.4 Effect on analog value representation

4.4.1 Effect of the supply voltage and the operating state on analog output values

The output values of the analog modules are dependent on the supply voltage for electronics/encoders and on the operating state of the PLC (CPU of the DP master). This is illustrated by the table below.

Table 4-5 Relationship between the analog output values for the operating state of the PLC (CPU of the DP master) and the supply voltage L+.

Operating state of the PLC (CPU of the DP master)		Supply voltage L+ on ET 200S (power module)	Output value of the electronic module with analog outputs
POWER ON	RUN	L+ present	PLC values
			Until first value output: • After startup, a signal of 0 mA or 0 V is output. • Dependent on the parameter "CPU/ master STOP"
		L+ missing	-
POWER ON	STOP	L+ present	Dependent on the parameter "CPU/master STOP"
		L+ missing	-
POWER OFF	-	L+ present	Dependent on the parameter "CPU/master STOP"
		L+ missing	-

4.4.2 Influence of the value range on the 2AO U ST analog output

The way electronic modules respond to analog outputs depends on where the output values fall within the value range. This is illustrated by the table below.

Table 4-6 Response of the analog modules, depending on where the analog output value falls within the range of values

Output value falls in ...	Output value in SIMATIC S5/S7 format
Nominal range	Value from DP master
Over-/Undershoot range	Value from DP master
Overflow	0-signal
Underflow	0-signal
Prior to parameter assignment, or with incorrect parameter assignment*	0-signal
* With product version 1 of the 2AO U ST, the following applies: If the configured substitute value is outside the nominal range, a diagnostics message for a parameter setting error is registered and the SF LED lights. In this status the output values transferred from the DP master are output at the analog output modules.	

Connecting

5

5.1 Connecting analog outputs

Introduction

This chapter describes the factors to consider when connecting the analog outputs.

Cables for analog signals

You should use shielded and twisted-pair cables for the analog signals. This reduces the effect of interference. You should ground the shield of the analog cables at both ends. If there are differences in potential between the cable ends, an equipotential bonding current that may interfere with the analog signals will flow across the shield. In this case, you should only ground the shield at one end of the cable.

Analog output modules

In the case of the analog output modules there is generally galvanic isolation

- Between logic and backplane bus.
- Between the load voltage and $M_{ANA.}$