AMIKON TECHNICAL DOCUMENTATION

Installation Instructions

Siemens 6ES7135-4MB01-0AB0

Two-channel High Feature Current Output

OUTPUTS	RESOLUTION	LOAD	SUPPLY
2 current HF	**15 bits + sign**	**500 ohm max.**	**24 V DC**

For qualified personnel only. Isolate the equipment and follow the complete manufacturer and site safety procedures. This reference does not replace the approved project design or the full installation manual.

01 PREPARATION AND WIRING CHECKS

- Match order number, product version and the exact interface's permitted module list.
- Follow the correct two-conductor terminal drawing and shared-reference arrangement.
- Check loop resistance, inductance and shielded-cable requirements.
- Restore current ranges, applicable clocked timing, wire-break options and STOP substitutes.
- Apply station exchange safeguards and verify load current before service.

02 ORIGINAL WIRING REFERENCE

Original source PDF pages: manual pp. 493,2-3,494-496,128-132,424; interface pp. 1-3,12. The following pages retain the original Siemens drawings and printed page numbers.

Source: Siemens 07/2003, EWA-4NEB780602402-09. Original wiring and safety pages follow.

Siemens 08/2010, A5E01584258-04; interface source pp. 1-3,12

13.20 2AO I High Feature analog electronic module (6ES7135-4MB01-0AB0)

Order number

6ES7135-4MB01-0AB0

Features

- 2 outputs for current output
- Output range:
  - ± 20 mA, resolution 15 bits + sign
  - 4 to 20 mA, resolution 15 bits
- Isolated from the load voltage L+
- Supports clocked operation
  - Minimum time for the clocked DP cycle (T_{DPmin}): 3.75 ms
  - Minimum conversion time of the output modules: (T_{WAmin}): 1.5 ms

Terminal assignment

The following table indicates the terminal assignment of the 2AO I High Feature for the different terminal modules:

Table 13-51 Terminal assignment of the 2AO I High Feature

View	Terminal assignment	Remarks
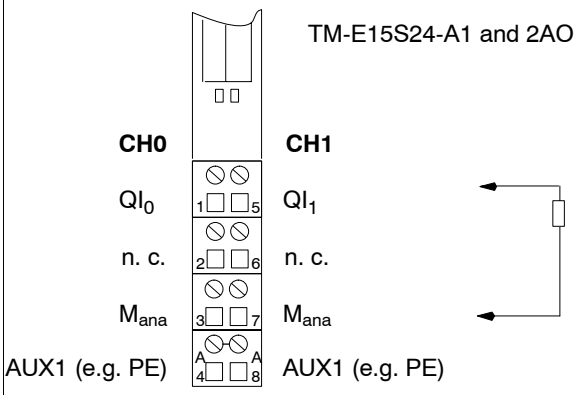		Channel 0: Terminals 1 to A4 Channel 1: Terminals 5 to A8 QI: Analog output current M_{ana}: Ground of the module Terminals 2 and 6 can be used for unneeded wires of up to 30 VDC.

Safety Guidelines

This manual contains notices intended to ensure personal safety, as well as to protect the products and connected equipment against damage. These notices are highlighted by the symbols shown below and graded according to severity by the following texts:

Danger

indicates that death, severe personal injury or substantial property damage will result if proper precautions are not taken.

Warning

indicates that death, severe personal injury or substantial property damage can result if proper precautions are not taken.

Caution

indicates that minor personal injury can result if proper precautions are not taken.

Caution

indicates that property damage can result if proper precautions are not taken.

Notice

draws your attention to particularly important information on the product, handling the product, or to a particular part of the documentation.

Qualified Personnel

Only **qualified personnel** should be allowed to install and work on this equipment. Qualified persons are defined as persons who are authorized to commission, to ground and to tag circuits, equipment, and systems in accordance with established safety practices and standards.

Correct Usage

Note the following:

Warning

This device and its components may only be used for the applications described in the catalog or the technical description, and only in connection with devices or components from other manufacturers which have been approved or recommended by Siemens.

This product can only function correctly and safely if it is transported, stored, set up, and installed correctly, and operated and maintained as recommended.

Trademarks

SIMATIC®, SIMATIC HMI® and SIMATIC NET® are registered trademarks of SIEMENS AG.

Third parties using for their own purposes any other names in this document which refer to trademarks might infringe upon the rights of the trademark owners.

Copyright © Siemens AG 1998-2003 All rights reserved

The reproduction, transmission or use of this document or its contents is not permitted without express written authority. Offenders will be liable for damages. All rights, including rights created by patent grant or registration of a utility model or design, are reserved.

Siemens AG
Bereich Automation and Drives
Geschaeftsgebiet Industrial Automation Systems
Postfach 4848, D- 90327 Nuernberg

Disclaim of Liability

We have checked the contents of this manual for agreement with the hardware and software described. Since deviations cannot be precluded entirely, we cannot guarantee full agreement. However, the data in this manual are reviewed regularly and any necessary corrections included in subsequent editions. Suggestions for improvement are welcomed.

© Siemens AG 2003
Technical data subject to change.

Preface

Purpose of the manual

The information in this manual enables you to run the ET 200S distributed I/O system on PROFIBUS-DP as a DP slave.

Required level of knowledge

Knowledge of the field of automation engineering is required to understand the manual.

Scope of the manual

This manual is valid for the components of the ET 200S distributed I/O system specified in Appendix A.

This manual contains a description of the components that were valid at the time the manual was published. We reserve the right to enclose a Product Information bulletin containing up-to-date information about new components and new versions of components.

Changes since the previous version

The following changes/additions have been made since the previous version of the manual:

- New function: option handling
- New ET 200S Power Supply module
- New PM-E 24–48 VDC power module
- New 4 DI NAMUR electronic module
- Changes to the IM151-1 STANDARD and IM151-1 FO STANDARD interface modules

Table 13-51 Terminal assignment of the 2AO I High Feature, continued

View	Terminal assignment	Remarks
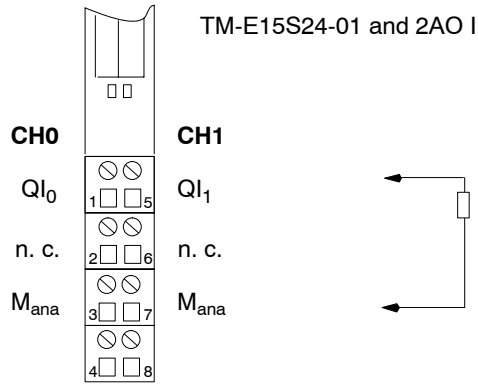	TM-E15S24-01 and 2AO I High Feature	Channel 0: Terminals 1 to 4 Channel 1: Terminals 5 to 8 QI: Analog output current M_{ana}: Ground of the module Terminals 2 and 6 and 4 and 8 can be used for unneeded wires of up to 30 VDC.
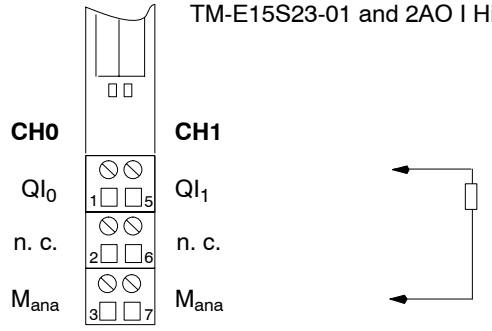	TM-E15S23-01 and 2AO I High Feature	Channel 0: Terminals 1 to 3 Channel 1: Terminals 5 to 7 QI: Analog output current M_{ana}: Ground of the module Terminals 2 and 6 can be used for unneeded wires of up to 30 VDC.
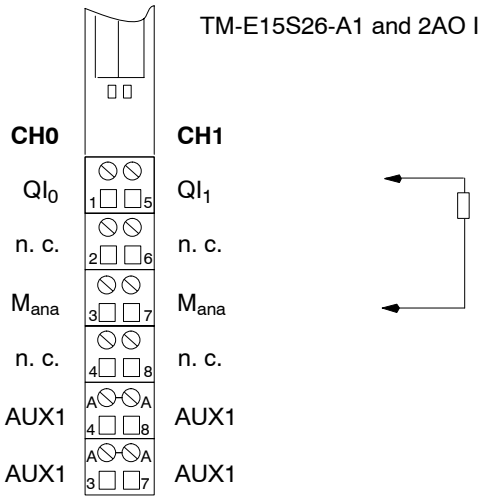	TM-E15S26-A1 and 2AO I High Feature	Channel 0: Terminals 1 to A3 Channel 1: Terminals 5 to A7 QI: Analog output current M_{ana}: Ground of the module Terminals 2 and 6 and 4 and 8 can be used for unneeded wires of up to 30 VDC.

Block diagram

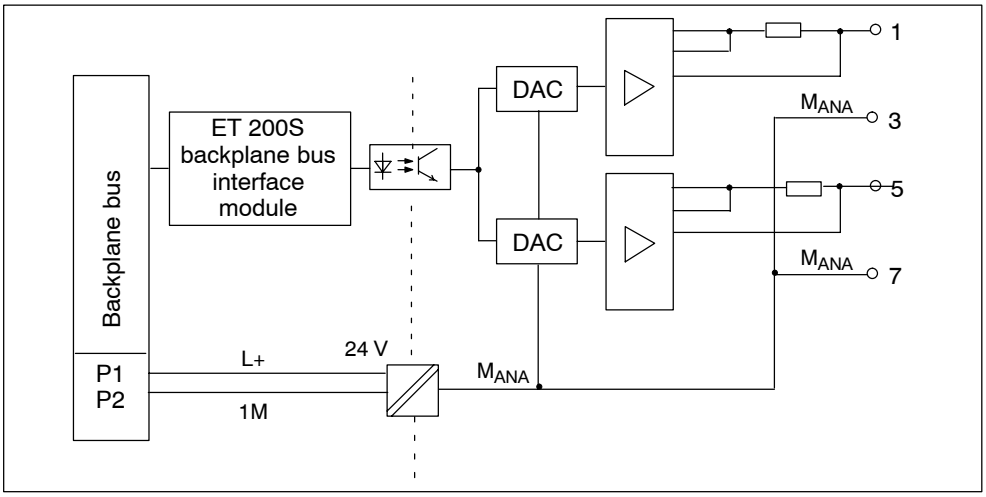

Figure 13-22 Block diagram of the 2AO I High Feature

Technical specifications

Dimensions and weight	
Dimensions W × H × D (mm)	15 x 81 x 52
Weight	Approx. 40 g
Data for specific modules	
Supports clocked operation	Yes
Number of outputs	2
Length of cable	
• Shielded	Max. 200 m
Voltages, currents, potentials	
Rated supply voltage of the electronics L+	24 VDC
• Reverse polarity protection	Yes
Isolation	
• Between the channels and backplane bus	Yes
• Between channels and power supply of the electronics	Yes
• Between the channels	No
Permissible potential difference	
• Between M_{ANA} and $M_{internal}$ (U_{ISO})	75 VDC/60 VAC
Insulation tested	500 VDC
Current consumption	
• From the power supply L+	Max. 150 mA
Power dissipation of the module	Max. 2 W
Status, interrupts, diagnostics	
Diagnostic functions	
• Group error display	Red “SF” LED
• Diagnostic information readable	Yes
Substitute values can be applied	Yes, parameters can be assigned
Analog value generation	
Resolution (including sign)	±20 mA/16 bits 4 to 20 mA/15 bits
Conversion time (per channel)	Max. 1.0 ms
Settling time	
• For resistive load	0.25 ms
• For capacitive load	1.0 ms
• For inductive load	0.5 ms
Suppression of interference, limits of error	
Crosstalk between the outputs	> 60 dB
Operational limit (in the entire temperature range, with reference to the output range)	±0.07%
Basic error limit (operational limit at 25 °C with reference to output range)	±0.03%
Temperature error (with reference to the output range)	±0.001%/K
Linearity error (with reference to the output range)	±0.02%
Repeatability (in steady state at 25 °C with reference to output range)	±0.01%
Output ripple (with reference to output range, bandwidth 0 to 50 kHz)	±0.02%
Data for selecting an actuator	
Output range (rated value)	±20 mA 4 to 20 mA
Load impedance (in the rated range of the output)	
• For current outputs	Max. 500 Ω
For inductive load	1 mH
Current output	
• No-load voltage	18 V
Destruction limit against voltages/currents applied from outside	
• Voltage at the outputs to M_{ANA}	Max. 15 V continuous; 75 V for max. 1 s (pulse duty factor 1:20)
• Current	Max. DC 50 mA
Connection of actuators	
Connection of actuators	
• Current output	
Two-conductor connection	Possible

Caution

Do not look directly into the opening of the transmission diodes.
The light beam that comes out could damage your eyes.

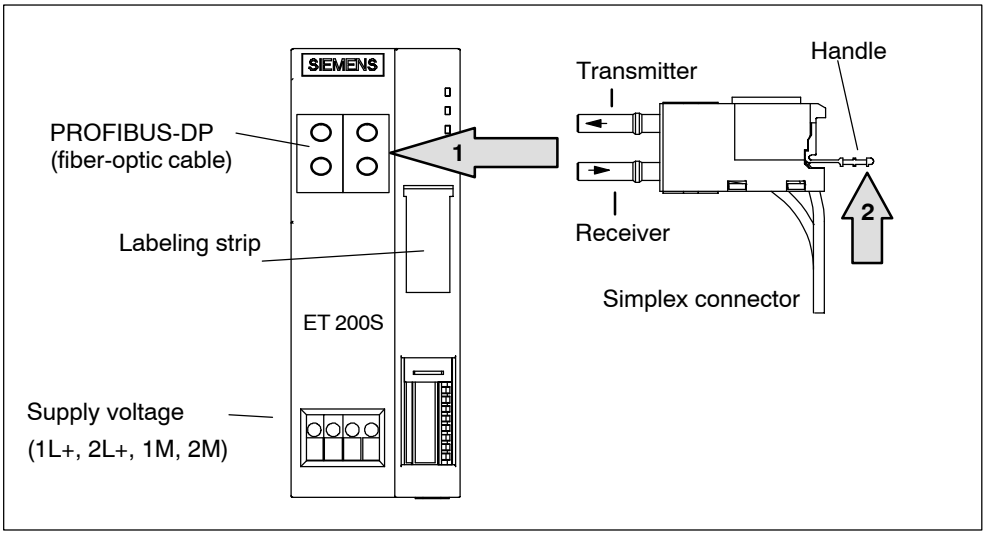

Figure 5-13 Wiring the IM151-1 FO STANDARD

5.5 Inserting and identifying the electronic modules

Features

- The electronic modules are inserted in the terminal modules.
- A labeling strip allows you to identify the electronic modules.
- Electronic modules are:
  - Self-coding
  - Type-coded

  The first time you insert an electronic module, a code element engages on the terminal module. This mechanically prevents the wrong electronic module from being inserted.

Requirements

Adhere to the rules below for inserting electronic modules. See Section 3.5 (The electronic modules you can use on the various terminal modules).

Inserting and identifying the electronic modules

1. Insert the electronic module in the terminal module until you hear it snap into place.
2. Pull the labeling strip up out of the electronic module in order to identify it.
3. Then put the labeling strip back into the electronic module.

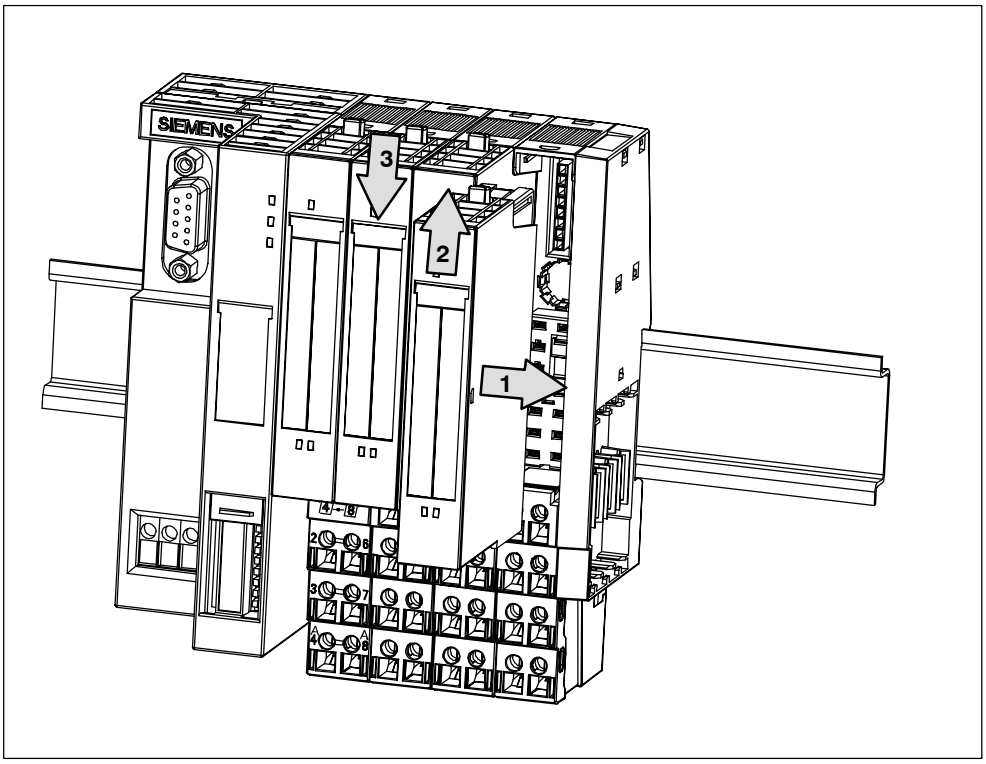

Figure 5-14 Inserting and identifying electronic modules

Removing electronic modules

1. Simultaneously press the two release buttons on the top and bottom of the electronic module.
2. Pull the electronic module out from the terminal module at the front.

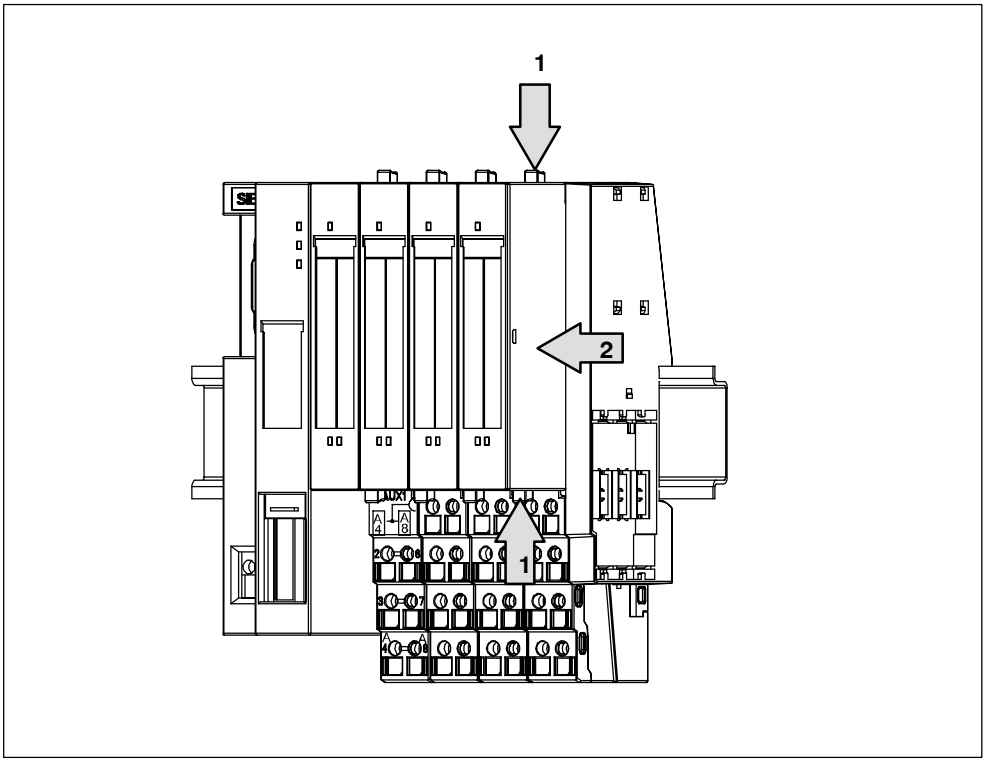

Figure 5-15 Removing electronic modules

Changing the type of an electronic module

You have already removed the electronic module:

1. Use a screwdriver to push the code element out of the terminal module.
2. Put the code element on the used electronic module again.
3. Insert the new electronic module (different type) in the terminal module until you hear it snap into place.
4. Identify the new electronic module.

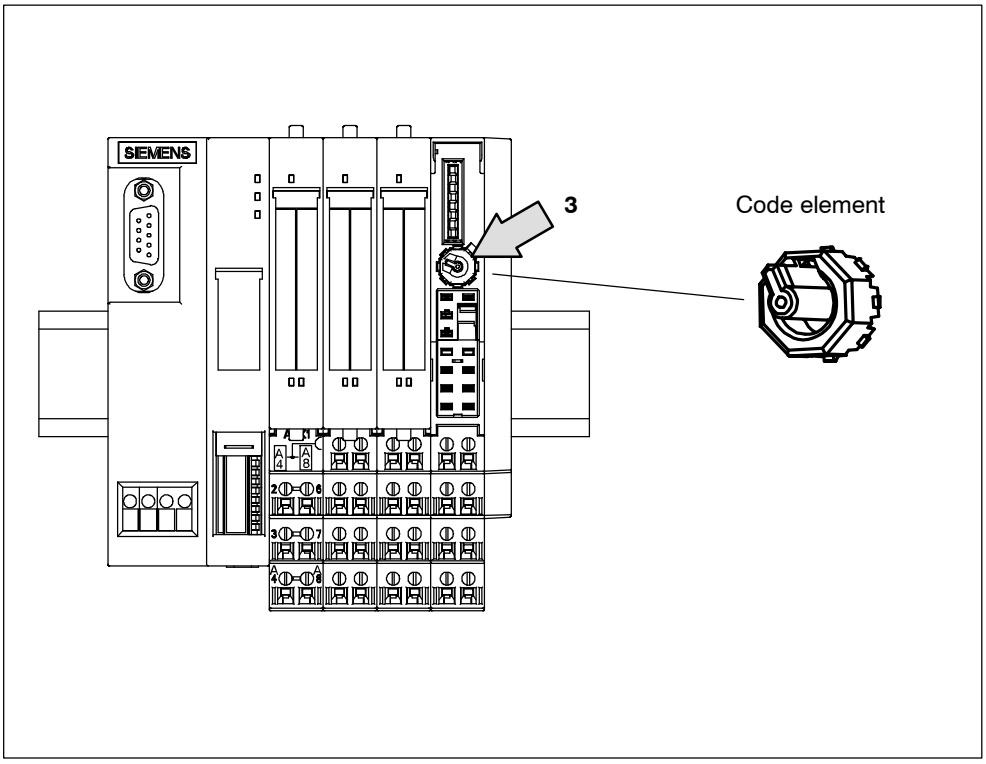

Figure 5-16 Removing the code element

Warning

When you make changes to the code, it can lead to dangerous states in your system.

Replacing a defective electronic module

You have already removed the electronic module:

1. Remove the code element from bottom of the new electronic module.
2. Insert the new electronic module (same type) in the terminal module until you hear it snap into place.
3. Identify the new electronic module.

Removing and inserting electronic modules during operation

ET 200S supports the removal and insertion of modules during operation (during the RUN operating mode). The ET 200S remains in RUN mode when an electronic module is removed. The protective conductor connections of the ET 200S are not interrupted.

Note

- You cannot remove and insert modules during operation unless the corresponding parameters have been assigned. See Section 9.1.
- You can remove and insert modules during operation as of the IM151-1 BASIC, IM151-1 STANDARD (6ES7 151-1AA01-0AB0), IM151-1 FO STANDARD, and IM151-1 HIGH FEATURE.
- If **one** module is missing (gap) and the ET 200S is switched on, the station will not start up (see Section 6.6.10).
- The removal and insertion of modules affects the clocking (equidistance).

If you replace more than one module, only one gap can result.

The following table indicates which modules you can remove and insert under which conditions:

Table 5-1 Removing and inserting electronic modules

Modules	Removing and inserting	Conditions
Interface module	No	——
Power modules	Yes	The load voltage must be switched off.
Digital electronic modules (input)	Yes	——
Digital electronic modules (output)	Yes	The load voltage must be switched off by means of an external switch/fuse.
Analog electronic modules	Yes	——
4 IQ-SENSE	Yes	The sensors can also be replaced during operation. These are then parameterized automatically by the electronic module.

Temperature coefficient

The correction factor for the temperature coefficient (α value) specifies how much the resistance of a certain material changes when the temperature is raised by 1°C.

The temperature coefficient depends on the chemical composition of the material. Only one value is used in Europe for each type of sensor (default value).

Additional values enable you to make a sensor-specific setting for the temperature coefficient, therefore ensuring more accuracy.

Parameters for

- 2AO U Standard, 2AO U High Feature analog electronic module
- 2AO I Standard, 2AO I High Feature analog electronic module

Table 13-35 Parameters for analog output modules U, I

2AO U Standard, 2AO U High Feature	2AO I Standard, 2AO I High Feature	Value range	Default	Applicability
Group diagnosis (parameter assignment error, internal error)		• Disable • Enable	Disable	Module
Diagnostics: Short-circuit to M	——	• Disable • Enable	Disable	Channel
——	Diagnostics: Wire break	• Disable • Enable	Disable	Channel
Reaction to CPU-/master-STOP		• Output de-energized • Substitute a value • Keep last value	Output de-energized	Module
Type/range of output	——	• Deactivated • 1 to 5 V • ± 10 V	±10 V	Channel
——	Type/range of output	• Deactivated • 4 to 20 mA • ± 20 mA	4 to 20 mA	Channel
Substitute value [1]		0 to 65535 (value range must be inside the rated range)	±10 V/±20 V: 0 V 4 to 20 mA: 4 mA 1 to 5 V: 1 V	Channel

[1] If there is no voltage going to the IM but the supply to the analog output modules continues, the parameterized substitute values are output. Substitute values must be within the nominal range. You can assign as parameters values from –27648 to +27648 (in the case of parameter assignment by means of the device database file).

SIEMENS

SIMATIC

ET 200S distributed I/O Interface module IM151-3 PN HIGH FEATURE (6ES7151-3BA23-0AB0)

Manual

Preface

Properties 1

Parameters 2

Functions 3

Interrupt, error, and system messages 4

Response times 5

08/2010

A5E01584258-04

Legal information

Warning notice system

This manual contains notices you have to observe in order to ensure your personal safety, as well as to prevent damage to property. The notices referring to your personal safety are highlighted in the manual by a safety alert symbol, notices referring only to property damage have no safety alert symbol. These notices shown below are graded according to the degree of danger.

⚠ DANGER
indicates that death or severe personal injury **will** result if proper precautions are not taken.

⚠ WARNING
indicates that death or severe personal injury **may** result if proper precautions are not taken.

⚠ CAUTION
with a safety alert symbol, indicates that minor personal injury can result if proper precautions are not taken.

CAUTION
without a safety alert symbol, indicates that property damage can result if proper precautions are not taken.

NOTICE
indicates that an unintended result or situation can occur if the corresponding information is not taken into account.

If more than one degree of danger is present, the warning notice representing the highest degree of danger will be used. A notice warning of injury to persons with a safety alert symbol may also include a warning relating to property damage.

Qualified Personnel

The product/system described in this documentation may be operated only by **personnel qualified** for the specific task in accordance with the relevant documentation for the specific task, in particular its warning notices and safety instructions. Qualified personnel are those who, based on their training and experience, are capable of identifying risks and avoiding potential hazards when working with these products/systems.

Proper use of Siemens products

Note the following:

⚠ WARNING
Siemens products may only be used for the applications described in the catalog and in the relevant technical documentation. If products and components from other manufacturers are used, these must be recommended or approved by Siemens. Proper transport, storage, installation, assembly, commissioning, operation and maintenance are required to ensure that the products operate safely and without any problems. The permissible ambient conditions must be adhered to. The information in the relevant documentation must be observed.

Trademarks

All names identified by ® are registered trademarks of the Siemens AG. The remaining trademarks in this publication may be trademarks whose use by third parties for their own purposes could violate the rights of the owner.

Disclaimer of Liability

We have reviewed the contents of this publication to ensure consistency with the hardware and software described. Since variance cannot be precluded entirely, we cannot guarantee full consistency. However, the information in this publication is reviewed regularly and any necessary corrections are included in subsequent editions.

Siemens AG
Industry Sector
Postfach 48 48
90026 NÜRNBERG
GERMANY

A5E01584258-04
Ⓟ 09/2010

Copyright © Siemens AG 2010.
Technical data subject to change

Preface

Preface

Purpose of the manual

This manual supplements the *ET 200S Distributed I/O System* Operating Instructions. Functions that apply generally to the ET 200S are described in the ET 200S distributed I/O system (http://support.automation.siemens.com/WW/view/en/1144348) operating instructions.

The information in this document along with the operating instructions enables you to commission the ET 200S.

Required basic knowledge

To understand these operating instructions you should have general knowledge of automation engineering.

Scope of the manual

The manual applies to this ET 200S module. It describes the components that are valid at the time of publication.

The manual is valid for the IM151-3 PN HIGH FEATURE ((6ES7151-3BA23-0AB0)) firmware version V7.0 and higher.

Changes since the previous version

The following changes have been implemented compared to the IM151-3 PN HIGH FEATURE(6ES7151-3BA23-0AB0) Manual, Edition 03/2009, with the number A5E01584256-02:

- Shared Device
- Media redundancy
- Option handling
- LED display of the configuration and parameter assignment errors
- PROFIenergy

Recycling and disposal

Thanks to the fact that it is low in contaminants, this ET 200S module is recyclable. For environmentally compliant recycling and disposal of your electronic waste, contact a company certified for the disposal of electronic waste.

Limitations for operation of the modules with IM151-3 PN HIGH FEATURE

The following modules cannot be used with the IM151-3 PN HIGH FEATURE:

Module	Up to order number	Up to product version
2AO U; HIGH FEATURE	6ES7135-4LB01-0AB0	3
2AO I; HIGH FEATURE	6ES7135-4MB01-0AB0	3
1SI serial interface module	6ES7138-4DF00-0AB0	4
Modbus/USS serial interface module	6ES7138-4DF01-0AB0	4
2PULSE	6ES7138-4DD00-0AB0	6
1Count 24V/100kHz	6ES7138-4DA03-0AB0	-
Motor starter • Direct starter • Reversing starter	 3RK1301-xxxxx-0AA1 3RK1301-xxxxx-1AA1	 - -

Pin assignment

The following table shows the pin assignment of the IM151-3 PN HIGH FEATURE interface module for the 24 VDC voltage supply and of the RJ45 interfaces for PROFINET IO:

Table 1- 1 Pin assignment of the IM151-3 PN HIGH FEATURE

View	Signal name		Name
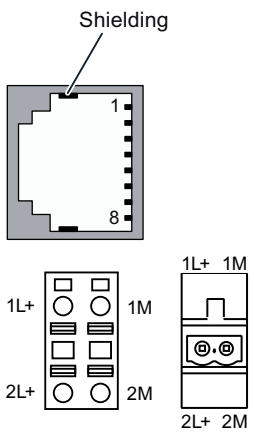	1	TD	Transmit data +
	2	TD_N	Transmit Data –
	3	RD	Receive data +
	4	GND	Ground
	5	GND	Ground
	6	RD_N	Receive Data –
	7	GND	Ground
	8	GND	Ground
	1L+		24 VDC
	2L+		24 VDC (for loop through)
	1M		Ground
	2M		Chassis ground (for loop through)