MANUFACTURER DOCUMENT PACKAGE

Manufacturer's Manual

Selected official pages for procurement and maintenance review

PRODUCT BRAND

Siemens

PRODUCT MODEL

6ES7134-4JB50-0AB0

Standard RTD Input Module. Source PDF pages: manual pp. 1-3,128-132,402-405,413,419-420,425,460-463; successor pp. 1-3,15. Adjacent model text on shared pages is outside this product reference.

OFFICIAL SOURCE

SIMATIC ET 200S Distributed I/O System; 07/2003, EWA-4NEB780602402-09

Source: Siemens 07/2003, EWA-4NEB780602402-09. Original manufacturer pages follow this cover.

Siemens 07/2008, A5E01076865-02; successor source pp. 1-3,15

Original Siemens 2003 reference, archive-hosted. Observe lead-resistance and sensing-line diagnostic limits. Appended 2008 predecessor-mode guidance describes conditional 4JB51 substitution, not additional 4JB50 features.

AMIKON PRODUCT SUPPORT

+86-18020776786 INFO@AMIKON.CN

AMIKONG.COM

Amikon Limited prepared this independent reference package. Selected manufacturer pages follow with their original content and pagination visible.

SIEMENS

SIMATIC

ET 200S
Distributed I/O System

Manual

The following supplement is part of this documentation:

No.	Designation	Drawing number	Edition
1	Product information	A5E00060322-10	07/2003

This manual is part of the documentation package with the order number
6ES7151-1AA00-8BA0

Edition 07/2003
EWA-4NEB780602402-09

Preface, Contents
1 Product Overview
2 Brief Instructions on Commissioning ET 200S
3 Configuration Options
4 Installation
5 Wiring and Fitting
6 Commissioning and Diagnostics
7 General Technical Specifications
8 ET 200S Power Supply
9 Interface Modules
10 Terminal Modules
11 Power Modules
12 Digital Electronic Modules
13 Analog Electronic Modules
14 4 IQ-SENSE
15 RESERVE Modules

Appendices

Glossary, Index

Safety Guidelines

This manual contains notices intended to ensure personal safety, as well as to protect the products and connected equipment against damage. These notices are highlighted by the symbols shown below and graded according to severity by the following texts:

Danger

indicates that death, severe personal injury or substantial property damage will result if proper precautions are not taken.

Warning

indicates that death, severe personal injury or substantial property damage can result if proper precautions are not taken.

Caution

indicates that minor personal injury can result if proper precautions are not taken.

Caution

indicates that property damage can result if proper precautions are not taken.

Notice

draws your attention to particularly important information on the product, handling the product, or to a particular part of the documentation.

Qualified Personnel

Only **qualified personnel** should be allowed to install and work on this equipment. Qualified persons are defined as persons who are authorized to commission, to ground and to tag circuits, equipment, and systems in accordance with established safety practices and standards.

Correct Usage

Note the following:

Warning

This device and its components may only be used for the applications described in the catalog or the technical description, and only in connection with devices or components from other manufacturers which have been approved or recommended by Siemens.

This product can only function correctly and safely if it is transported, stored, set up, and installed correctly, and operated and maintained as recommended.

Trademarks

SIMATIC®, SIMATIC HMI® and SIMATIC NET® are registered trademarks of SIEMENS AG.

Third parties using for their own purposes any other names in this document which refer to trademarks might infringe upon the rights of the trademark owners.

Copyright © Siemens AG 1998-2003 All rights reserved

The reproduction, transmission or use of this document or its contents is not permitted without express written authority. Offenders will be liable for damages. All rights, including rights created by patent grant or registration of a utility model or design, are reserved.

Siemens AG
Bereich Automation and Drives
Geschaeftsgebiet Industrial Automation Systems
Postfach 4848, D- 90327 Nuernberg

Disclaim of Liability

We have checked the contents of this manual for agreement with the hardware and software described. Since deviations cannot be precluded entirely, we cannot guarantee full agreement. However, the data in this manual are reviewed regularly and any necessary corrections included in subsequent editions. Suggestions for improvement are welcomed.

© Siemens AG 2003
Technical data subject to change.

Preface

Purpose of the manual

The information in this manual enables you to run the ET 200S distributed I/O system on PROFIBUS-DP as a DP slave.

Required level of knowledge

Knowledge of the field of automation engineering is required to understand the manual.

Scope of the manual

This manual is valid for the components of the ET 200S distributed I/O system specified in Appendix A.

This manual contains a description of the components that were valid at the time the manual was published. We reserve the right to enclose a Product Information bulletin containing up-to-date information about new components and new versions of components.

Changes since the previous version

The following changes/additions have been made since the previous version of the manual:

- New function: option handling
- New ET 200S Power Supply module
- New PM-E 24–48 VDC power module
- New 4 DI NAMUR electronic module
- Changes to the IM151-1 STANDARD and IM151-1 FO STANDARD interface modules

Caution

Do not look directly into the opening of the transmission diodes.
The light beam that comes out could damage your eyes.

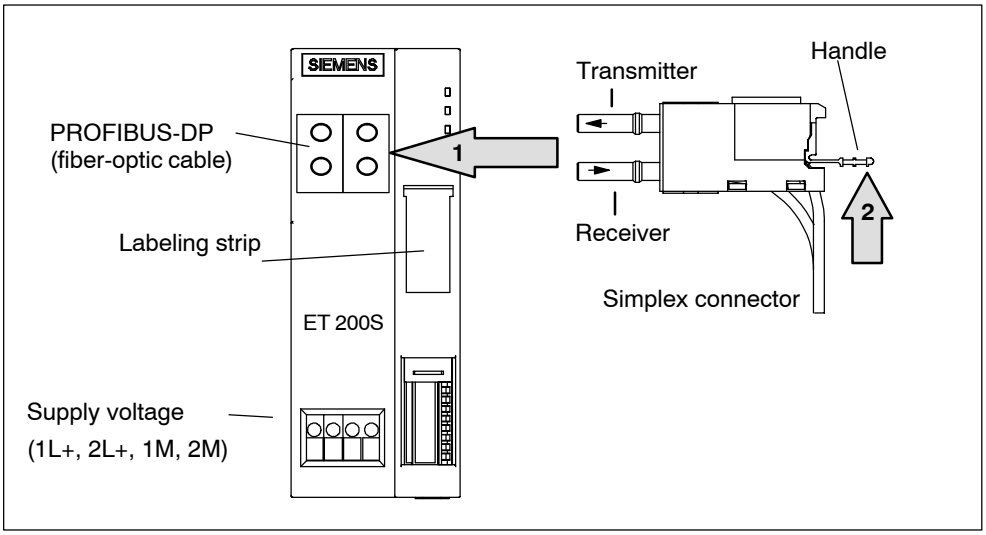

Figure 5-13 Wiring the IM151-1 FO STANDARD

5.5 Inserting and identifying the electronic modules

Features

- The electronic modules are inserted in the terminal modules.
- A labeling strip allows you to identify the electronic modules.
- Electronic modules are:
  - Self-coding
  - Type-coded

  The first time you insert an electronic module, a code element engages on the terminal module. This mechanically prevents the wrong electronic module from being inserted.

Requirements

Adhere to the rules below for inserting electronic modules. See Section 3.5 (The electronic modules you can use on the various terminal modules).

Inserting and identifying the electronic modules

1. Insert the electronic module in the terminal module until you hear it snap into place.
2. Pull the labeling strip up out of the electronic module in order to identify it.
3. Then put the labeling strip back into the electronic module.

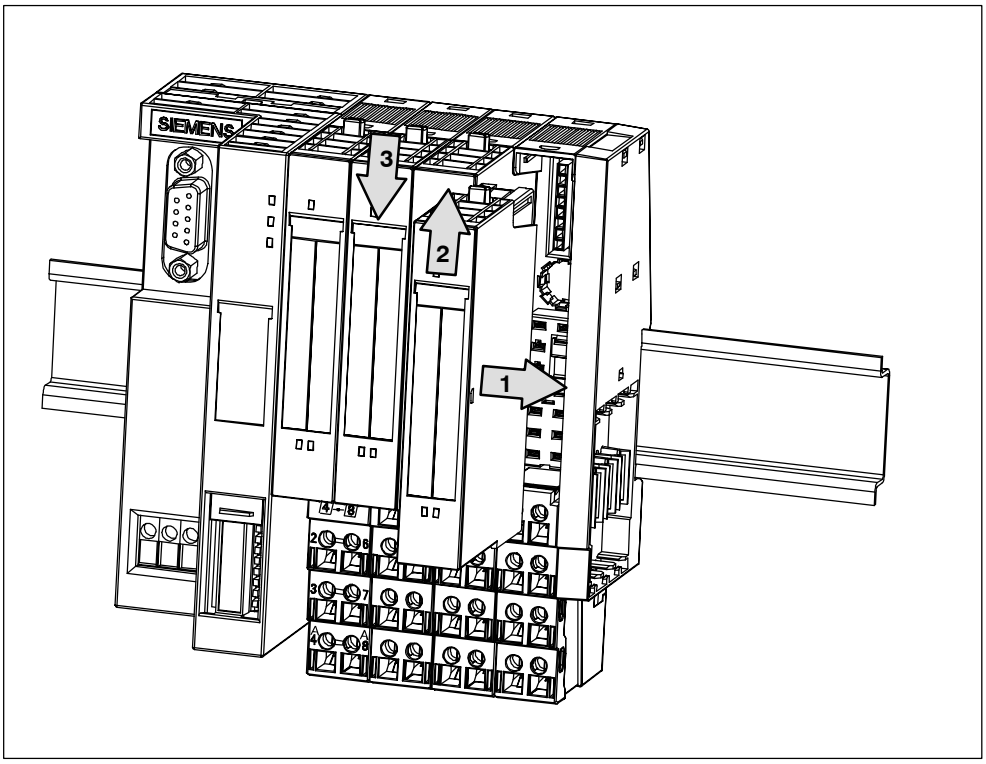

Figure 5-14 Inserting and identifying electronic modules

Removing electronic modules

1. Simultaneously press the two release buttons on the top and bottom of the electronic module.
2. Pull the electronic module out from the terminal module at the front.

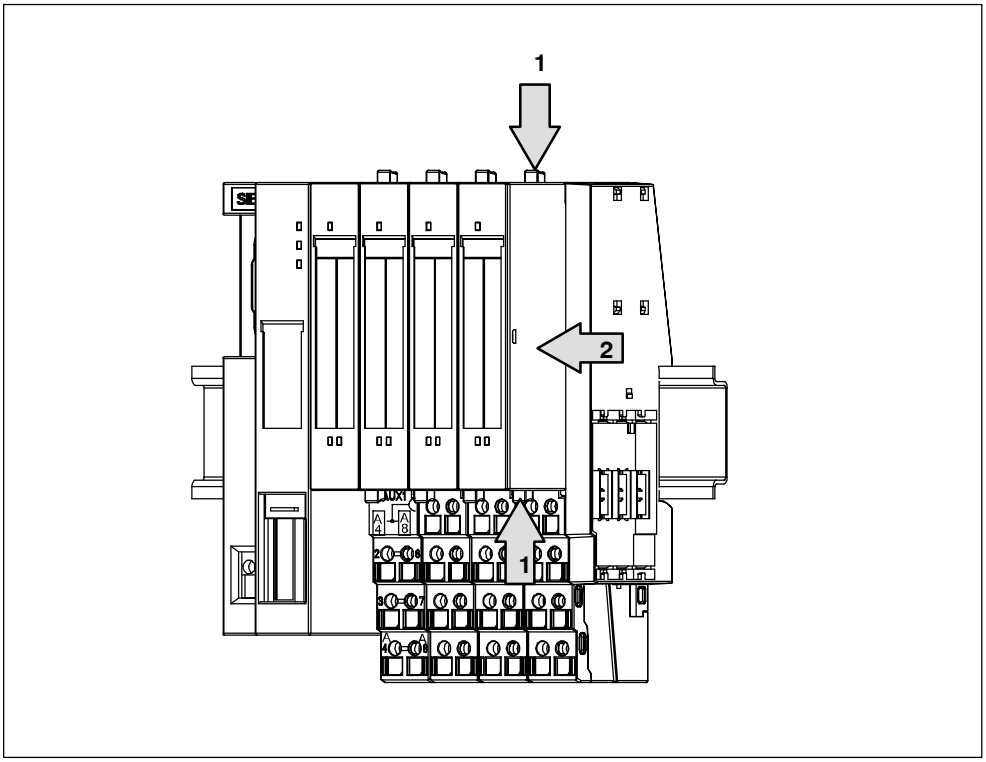

Figure 5-15 Removing electronic modules

Changing the type of an electronic module

You have already removed the electronic module:

1. Use a screwdriver to push the code element out of the terminal module.
2. Put the code element on the used electronic module again.
3. Insert the new electronic module (different type) in the terminal module until you hear it snap into place.
4. Identify the new electronic module.

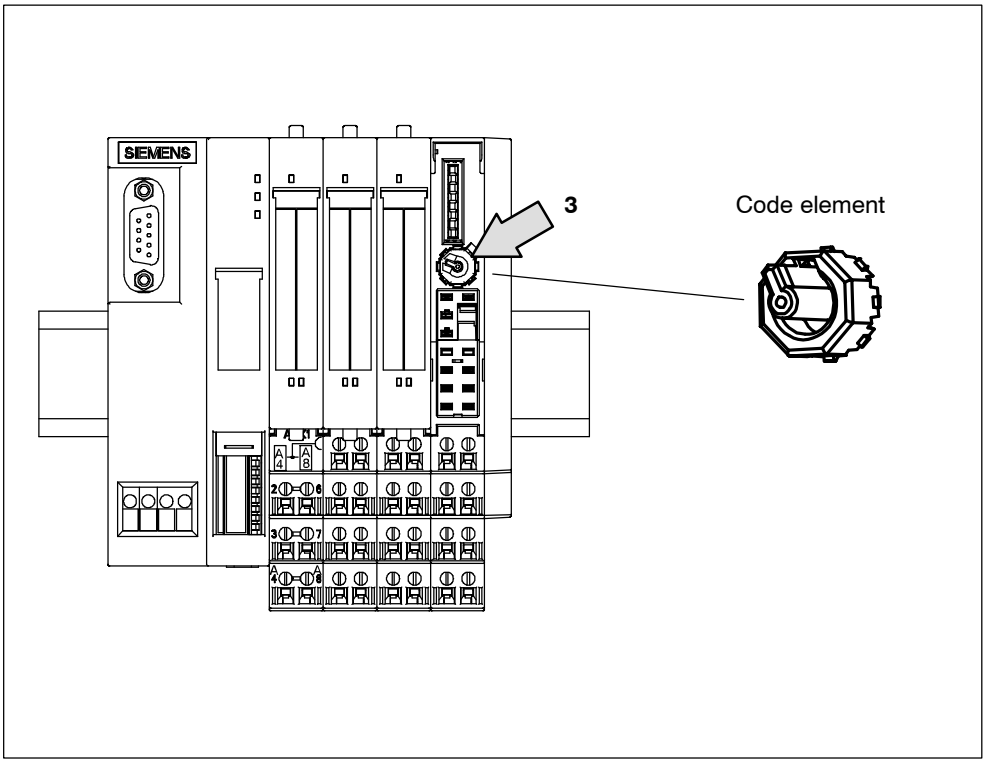

Figure 5-16 Removing the code element

Warning

When you make changes to the code, it can lead to dangerous states in your system.

Replacing a defective electronic module

You have already removed the electronic module:

1. Remove the code element from bottom of the new electronic module.
2. Insert the new electronic module (same type) in the terminal module until you hear it snap into place.
3. Identify the new electronic module.

Removing and inserting electronic modules during operation

ET 200S supports the removal and insertion of modules during operation (during the RUN operating mode). The ET 200S remains in RUN mode when an electronic module is removed. The protective conductor connections of the ET 200S are not interrupted.

Note

- You cannot remove and insert modules during operation unless the corresponding parameters have been assigned. See Section 9.1.
- You can remove and insert modules during operation as of the IM151-1 BASIC, IM151-1 STANDARD (6ES7 151-1AA01-0AB0), IM151-1 FO STANDARD, and IM151-1 HIGH FEATURE.
- If **one** module is missing (gap) and the ET 200S is switched on, the station will not start up (see Section 6.6.10).
- The removal and insertion of modules affects the clocking (equidistance).

If you replace more than one module, only one gap can result.

The following table indicates which modules you can remove and insert under which conditions:

Table 5-1 Removing and inserting electronic modules

Modules	Removing and inserting	Conditions
Interface module	No	——
Power modules	Yes	The load voltage must be switched off.
Digital electronic modules (input)	Yes	——
Digital electronic modules (output)	Yes	The load voltage must be switched off by means of an external switch/fuse.
Analog electronic modules	Yes	——
4 IQ-SENSE	Yes	The sensors can also be replaced during operation. These are then parameterized automatically by the electronic module.

13.2 Fundamentals of analog value processing

13.2.1 Connecting measuring sensors

Introduction

You can connect different measuring sensors to the analog input modules, depending on the type of module involved:

- Voltage sensor
- Current sensors as:
  - Two-wire measuring transducer
  - Four-wire measuring transducer
- Resistance-type sensor

In this chapter you will find out how to connect the measuring sensors and what to watch for when doing so.

Lines for analog signals

You should use shielded and twisted-pair lines for the analog signals. This reduces the effect of interference. You should ground the shield of the analog lines at both ends of the line. If there are differences in potential between the ends of the line, a compensating current flows via the shield that can interfere with the analog signals. If this is the case, you should only ground the shield at one end of the line.

Analog input modules

In the case of the analog input modules there is electrical isolation:

- Between the logic circuitry and backplane bus
- Between the load voltage and the channels. The following differences exist:
  - No isolation: Connection between M_{ANA} and the central grounding point
  - Isolation: No connection between M_{ANA} and the central grounding point (U_{ISO})

Analog output modules

In the case of the analog output modules there is generally electrical isolation:

- Between the logic circuitry and backplane bus
- Between the load voltage and $M_{ANA.}$

Note

Ensure that this potential difference (U_{ISO}) does not exceed the permitted value. If there is a possibility of exceeding the permitted value, make a connection between terminal M_{ANA} and the central grounding point.

Connecting measuring sensors to analog inputs

Between the measuring lines M– of the input channels and the reference point of the measuring circuit M_{ANA} there can be only a limited potential difference U_{CM} (common-mode voltage). To ensure that the permitted value is not exceeded, you must take different steps depending on the whether the sensors are isolated or non-isolated. The steps you have to take are described in this chapter.

Generally speaking, however, when connecting two-wire measuring transducers for current measurement and when connecting resistance-type sensors, you should not make a connection from M– to M_{ANA}. This also applies to correspondingly parameterized but unused inputs.

Note

For the analog input modules 2AI U, 2AI RTD, and 2AI TC, you must short-circuit unused analog inputs.

Abbreviations used

The meanings of the abbreviations in the figures below are as follows:

M +:	Measuring line (positive)
M –:	Measuring line (negative)
M_{ANA}:	Reference potential of the analog measuring circuit
M:	Frame connection
L +:	Rated load voltage 24 VDC
U_{CM}:	Potential difference between inputs and reference potential of the measuring circuit M_{ANA}
U_{ISO}:	Potential difference between M_{ANA} and the central grounding point

Isolated measuring sensors

The isolated measuring sensors are not connected to the local ground potential. They can be floating. Depending on local conditions or interference, potential differences U_{CM} (static or dynamic) can occur between the measuring lines M– of the input channels and the reference point of the measuring circuit M_{ANA}.

To ensure that the permitted value for U_{CM} is not exceeded in environments with strong EMC interference, the following applies:

- In the case of the analog input modules 2AI U, 2AI I 4WIRE, and 2AI TC: Connect M– to M_{ANA}.
- When connecting two-wire measuring transducers for current measurement and when connecting resistance-type sensors, you must not connect M– to M_{ANA}.

Isolated measuring sensors (continued)

Figure 13-1 illustrates the connection of isolated measuring sensors to the floating analog input modules.

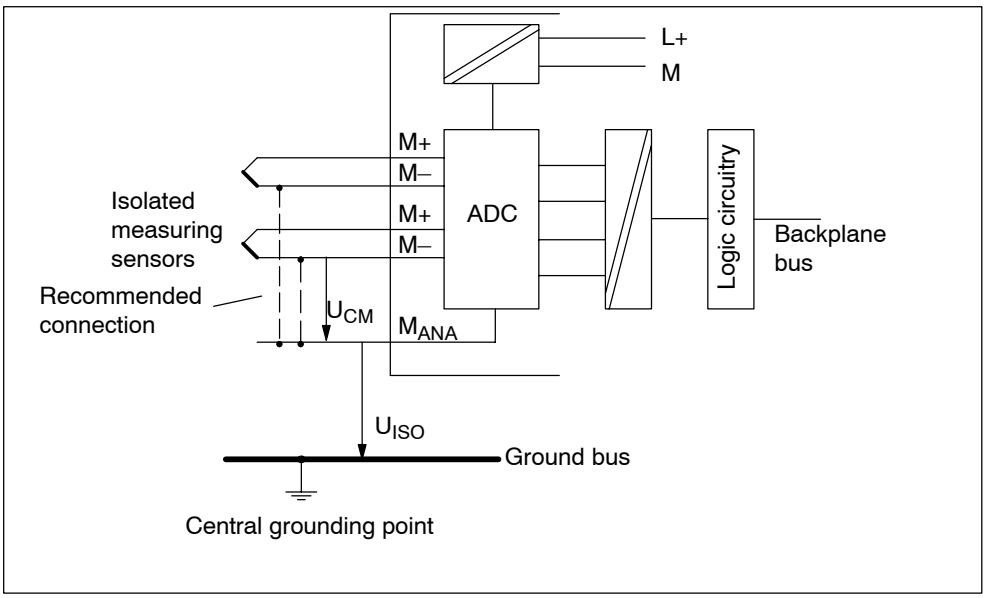

Figure 13-1 Connection of isolated measuring sensors to a floating analog input module

Non-isolated measuring sensors

The non-isolated measuring sensors are connected to the local ground potential. You must connect M_{ANA} to the ground potential. Depending on local conditions or interference, potential differences U_{CM} (static or dynamic) can occur between the locally distributed measuring points.

If the permitted value for U_{CM} is exceeded, there must be equalizing lines between the measuring points.

Figure 13-2 illustrates the connection of non-isolated measuring sensors to a floating analog input module.

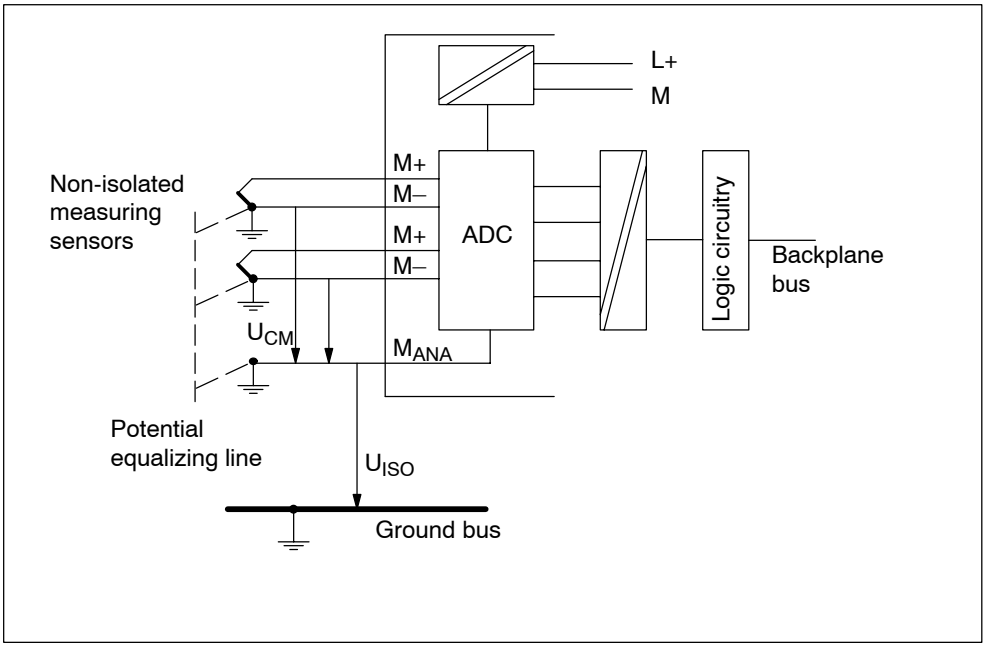

Figure 13-2 Connection of non-isolated measuring sensors to a floating analog input module

Operating four-wire measuring transducers on an external voltage supply

If there is isolation between the output and the supply of the measuring transducer, you can connect it to the 2AI I 4WIRE without additional connections.

If there is no isolation between the output and the supply of the measuring transducer, you can connect it to the 2AI I 4WIRE only if the reference potential of the power supply voltages (24 VDC) is the same.

If there is an increase in interference radiation, a connection between M– and M_{ana} on the terminal module of the 2AI I 4WIRE is recommended.

13.2.3 Notes on and circuits of unused channels of the analog input modules

- Deactivate unused input channels during parameter assignment.
- A deactivated channel always returns a value of $7FFF_H$.
- In the case of the standard modules 2AI U, 2AI I 2WIRE, 2AI I 4WIRE, 2AI RTD Standard, 2AI RTD High Feature, 2AI TC Standard, and 2AI TC High Feature, the cycle time of the module is halved.
- In the case of the high-speed modules 2AI U, 2AI I 2WIRE, and 2AI I 4WIRE, the cycle time remains unchanged at 1 ms.
- To adhere to the permissible potential differences (U_{CM}), you must wire jumpers on the terminal module for the unused channels. This is necessary in the case of the following modules:

Analog input module	TM terminal							
	Channel 0				Channel 1			
	1	2	3	4	5	6	7	8
2AI U Standard	●	●	●		●	●	●	
2AI RTD Standard, 2AI RTD High Feature, 2AI TC High Feature	●	●			●	●		
2AI TC Standard	●	●	●		●	●	●	
2AI U High Speed	●	●	●		●	●	●	

Parameters for

- 2AI RTD Standard analog electronic module
- 2AI TC Standard analog electronic module
- 2AI TC High Feature analog electronic module

Table 13-33 Parameters for analog input modules RTD, TC

2AI RTD Standard	2AI TC Standard	2AI TC High Feature	Value range	Default	Applica-bility
Group diagnosis (parameter assignment error, internal error)			• Disable • Enable	Disable	Module
Diagnostics: Overflow/underflow			• Disable • Enable	Disable	Module
Diagnos-tics: Wire break[2)]	Diagnostics: Wire break check[1)]		• Disable • Enable	Disable	Channel
Smoothing			• None • Weak • Medium • Strong	None	Channel
		Temperature unit	• Celsius • Fahrenheit	Celsius	Module
——	Reference junction	——	• None • RTD	None	Channel
——		Reference junction	• None • Yes (i.e. internal)	None	Channel
——	Reference junction number	——	• None • 1 to 8 (in the case of the IM151-1 STANDARD, IM151-1 FO STANDARD) • 1 (in the case of the IM151-1 BASIC, IM151-1 HIGH FEATURE)	None	Module
Type/ range of measure-ment	——		• Deactivated • 150 ohms • 300 ohms • 600 ohms • Pt100 Climatic • Ni100 Climatic Range • Pt100 Standard • Ni100 Standard	Pt100 Standard	Channel

Table 13-33 Parameters for analog input modules RTD, TC, continued

2AI RTD Standard	2AI TC Standard	2AI TC High Feature	Value range	Default	Applica-bility
——	Type/range of measure-ment	——	• Deactivated • Voltage ± 80 mV • TC-EL type T (Cu-CuNi) • TC-EL type K (NiCr-Ni) • TC-EL type B (PtRh-PtRh) • TC-EL type N (NiCrSi-NiSi) • TC-EL type E (NiCr-CuNi) • TC-EL type R (PtRh-Pt) • TC-EL type S (PtRh-Pt) • TC-EL type J (Fe-Cu-Ni) • TC-EL type L (Fe-Cu-Ni)	TC-EL type K (NiCr-Ni)	Channel
		Type/range of measurement	• Deactivated • Voltage ± 80 mV • TC-EL type T (Cu-CuNi) • TC-EL type K (NiCr-Ni) • TC-EL type B (PtRh-PtRh) • TC-EL type C (WRe-WRe) • TC-EL type N (NiCrSi-NiSi) • TC-EL type E (NiCr-CuNi) • TC-EL type R (PtRh-Pt) • TC-EL type S (PtRh-Pt) • TC-EL type J (Fe-Cu-Ni) • TC-EL type L (Fe-Cu-Ni)	TC-EL type K (NiCr-Ni)	Channel

1) Only with thermocouples. A parameter assignment error occurs when the wire break diagnosis is enabled in the voltage measuring range. The module does not start up.
2) The wire break is only detected with constant-current lines.

Smoothing

The individual measured values are smoothed by means of digital filtering. The smoothing can be adjusted in 4 steps, where the smoothing factor k multiplied by the cycle time of the electronic module corresponds to the time constant of the smoothing filter. The greater the smoothing, the greater the time constant of the filter.

The figures below show the step response for the different smoothing factors depending on the number of module cycles.

- Smoothing in the case of the 2AI U Standard, 2AI U High Feature, 2AI I 2WIRE Standard, 2AI I 4WIRE Standard, 2AI I 2/4WIRE High Feature, 2AI RTD Standard, 2AI RTD High Feature, 2AI TC Standard, 2AI TC High Feature

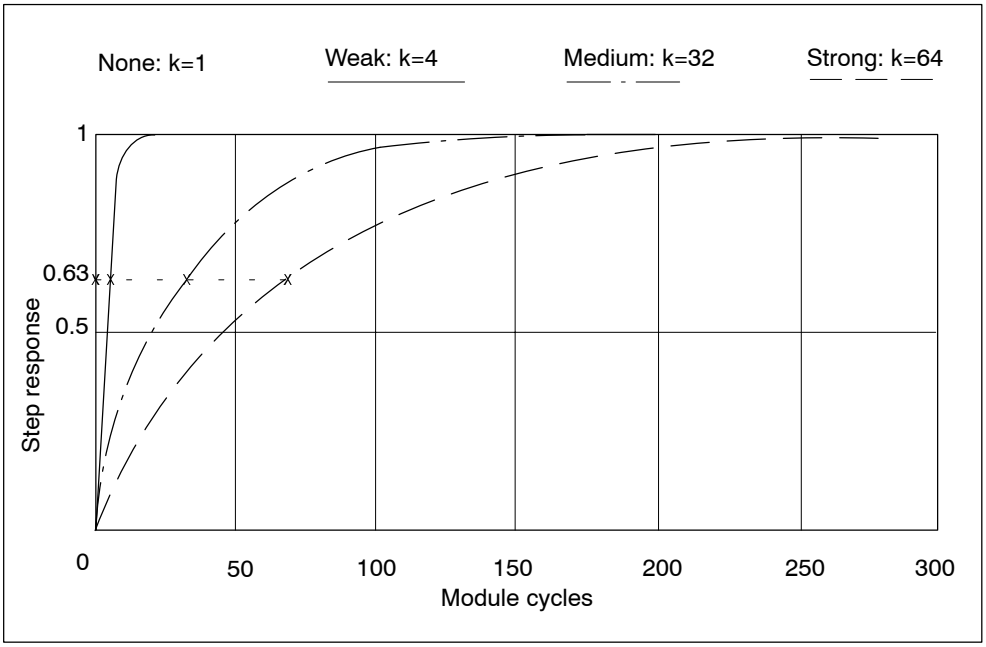

Figure 13-5 Smoothing in the case of the 2AI U Standard, 2AI U High Feature, 2AI I 2WIRE Standard, 2AI I 4WIRE Standard, 2AI I 2/4WIRE High Feature, 2AI RTD Standard, 2AI RTD High Feature, 2AI TC Standard, 2AI TC High Feature

13.13 2AI RTD Standard analog electronic module (6ES7134-4JB50-0AB0)

Order number

6ES7134-4JB50-0AB0

Features

- 2 inputs for resistance thermometers or resistance measurement
- Input ranges:
  - Resistance thermometers: Pt100, Ni100; resolution 15 bits + sign
  - Resistance measurement: 150 Ω, 300 Ω, 600 Ω; resolution max. 15 bits + sign
- Isolated from the load voltage L+
- Linearization of the sensor characteristic curves

Terminal assignment

The resistance thermometers/resistors are measured in a four-conductor connection. Constant current is fed to the resistance thermometers/resistors by means of connections I_C + and I_C –. The voltage generated at the resistance thermometer/resistor is measured by means of the connections M + and M –. This ensures highly accurate measurement results with the four-conductor connection.

With the two/three-conductor connection, you must apply corresponding jumpers to the module between M+ and I_c+ or M– and I_c–. However, you have to expect a loss of accuracy in the measurement results.

The following table indicates the terminal assignment of the 2AI RTD Standard on the terminal module.

Table 13-44 Terminal assignment of the 2AI RTD Standard

View	Terminal assignment	Remarks
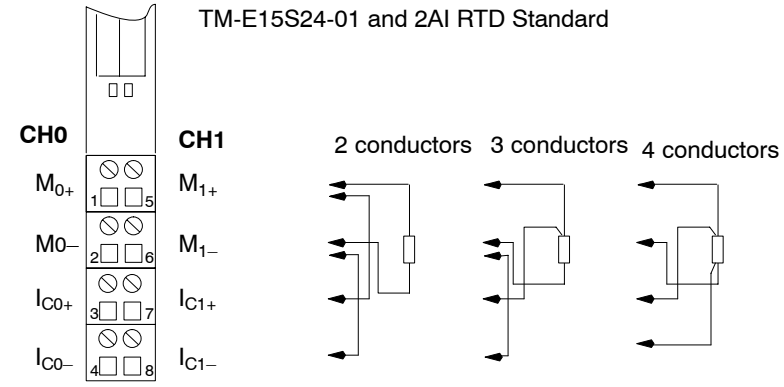	TM-E15S24-01 and 2AI RTD Standard	Channel 0: Terminals 1 to 4 Channel 1: Terminals 5 to 8 M+: Measuring line (positive) I_{C-}: Constant-current line (negative) M–: Measuring line (negative) I_{C+}: Constant-current line (positive)
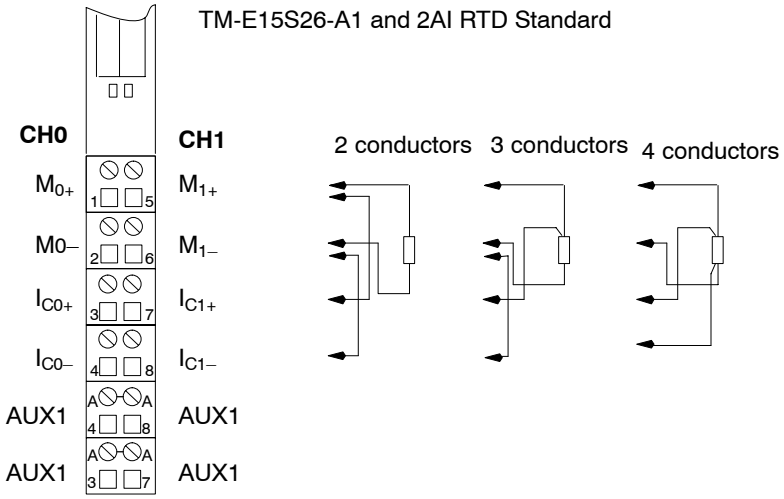	TM-E15S26-A1 and 2AI RTD Standard	Channel 0: Terminals 1 to A3 Channel 1: Terminals 5 to A7 M+: Measuring line (positive) I_{C-}: Constant-current line (negative) M–: Measuring line (negative) I_{C+}: Constant-current line (positive)

Note

A wire break in the measuring lines of the temperature sensors for three- or four-conductor connections (connections 1 and 2, or 5 and 6) is not detected. Undefined values can be reported.

Block diagram

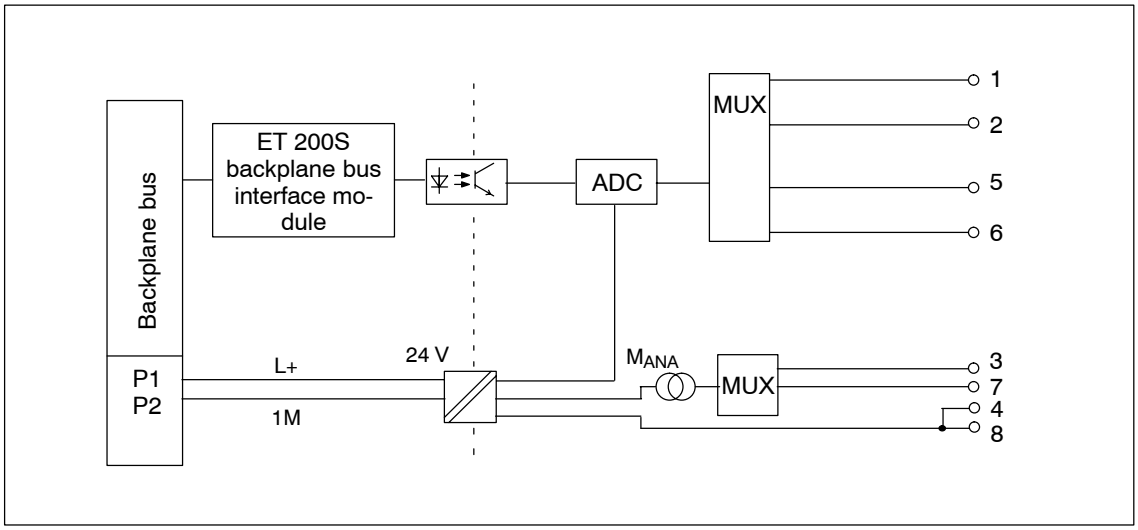

Figure 13-15 Block diagram of the 2AI RTD Standard

Technical specifications

Dimensions and weight	
Dimensions W × H × D (mm)	15 x 81 x 52
Weight	Approx. 40 g
Data for specific modules	
Supports clocked operation	No
Number of inputs	2
Length of cable	
• Shielded	Max. 200 m
Voltages, currents, potentials	
Rated load voltage L+ (from the power module)	24 VDC
• Reverse polarity protection	Yes
Power supply of the transmitters	Yes
• Constant-current supply for resistance-type sensors	Approx. 1.5 mA
• Short-circuit protection	Yes

Isolation	
• Between the channels and backplane bus	Yes
• Between the channels and load voltage L+	Yes
• Between the channels	No
Permissible potential difference	
• Between M_{ANA} and the central grounding point (U_{ISO})	75 VDC/60 VAC
Insulation tested	500 VDC
Current consumption	
• From load voltage L+	Max. 30 mA
Power dissipation of the module	Typ. 0.6 W
Status, interrupts, diagnostics	
Diagnostic functions	
• Group error	Red “SF” LED
• Diagnostic functions readable	Yes

Analog value generation		
Measuring principle	Integrative	
Integration and cycle time/ resolution per channel:		
• Integration time parameterizable	Yes	
• Interference frequency suppression in Hz	60	50
• Integration time in milliseconds	16.7	20
• Conversion time in ms	110	130
• Cycle time in ms	Number of active channels per module × conversion time	
• Resolution (including overrange)	Pt100, Ni100/ 15 bits + sign 150Ω/14 bits/ 300Ω, 600Ω/15 bits	

Suppression of interference, limits of error	
Interference voltage suppression for f = n x (f1 ± 1%), (f1 = interference frequency)	
• Common-mode interference (U_{pp})	Min. 90 dB
• Series-mode interference (peak interference value < rated value of input range)	Min. 70 dB
Crosstalk between the inputs	Min. –50 dB
Operational limit (in the entire temperature range, with reference to the input range)	± 0.6%
Basic error limit (operational limit at 25°C with reference to input range)	± 0.4%
Temperature error (with reference to the input range)	± 0.005%/K
Linearity error (with reference to the input range)	± 0.01%
Repeatability (in steady state at 25°C with reference to input range)	± 0.05%

Data for selecting a sensor	
Input range (rated value)/input resistance	
• Resistance-type sensor	150 Ω/min. 2 MΩ 300 Ω/min. 2 MΩ 600 Ω/min. 2 MΩ
• Resistance thermometers	Pt100/min. 2 MΩ Ni100/min. 2 MΩ
Permitted input voltage (destruction limit)	Max. 9 V
Connection of the sensors	
• For measuring resistance	
– Two and three-conductor connection	Yes, line resistances are also measured, jumpers at T_R
– Four-conductor connection	Yes
Characteristic curve linearization	Yes, parameters can be assigned for Pt100, Ni100
Smoothing of the measured values	Yes, parameterizable in 4 steps by means of digital filtering
Step	Time constant
None	1 x cycle time
Weak	4 x cycle time
Medium	32 x cycle time
Strong	64 x cycle time

SIEMENS

SIMATIC

ET 200S distributed I/O 2/4AI RTD ST analog electronic module (6ES7134-4JB51-0AB0)

Manual

Preface

Properties 1

Parameters 2

Diagnostics 3

Analog value representation 4

Connecting 5

07/2008

A5E01076865-02

Legal information

Warning notice system

This manual contains notices you have to observe in order to ensure your personal safety, as well as to prevent damage to property. The notices referring to your personal safety are highlighted in the manual by a safety alert symbol, notices referring only to property damage have no safety alert symbol. These notices shown below are graded according to the degree of danger.

⚠ DANGER
indicates that death or severe personal injury **will** result if proper precautions are not taken.

⚠ WARNING
indicates that death or severe personal injury **may** result if proper precautions are not taken.

⚠ CAUTION
with a safety alert symbol, indicates that minor personal injury can result if proper precautions are not taken.

CAUTION
without a safety alert symbol, indicates that property damage can result if proper precautions are not taken.

NOTICE
indicates that an unintended result or situation can occur if the corresponding information is not taken into account.

If more than one degree of danger is present, the warning notice representing the highest degree of danger will be used. A notice warning of injury to persons with a safety alert symbol may also include a warning relating to property damage.

Qualified Personnel

The device/system may only be set up and used in conjunction with this documentation. Commissioning and operation of a device/system may only be performed by **qualified personnel**. Within the context of the safety notes in this documentation qualified persons are defined as persons who are authorized to commission, ground and label devices, systems and circuits in accordance with established safety practices and standards.

Proper use of Siemens products

Note the following:

⚠ WARNING
Siemens products may only be used for the applications described in the catalog and in the relevant technical documentation. If products and components from other manufacturers are used, these must be recommended or approved by Siemens. Proper transport, storage, installation, assembly, commissioning, operation and maintenance are required to ensure that the products operate safely and without any problems. The permissible ambient conditions must be adhered to. The information in the relevant documentation must be observed.

Trademarks

All names identified by ® are registered trademarks of the Siemens AG. The remaining trademarks in this publication may be trademarks whose use by third parties for their own purposes could violate the rights of the owner.

Disclaimer of Liability

We have reviewed the contents of this publication to ensure consistency with the hardware and software described. Since variance cannot be precluded entirely, we cannot guarantee full consistency. However, the information in this publication is reviewed regularly and any necessary corrections are included in subsequent editions.

이 기기는 업무용(A급) 전자파 적합기기로서 판매자 또는 사용자는 이 점을 주의하시기 바라며 가정 외의 지역에서 사용하는 것을 목적으로 합니다.

Siemens AG
Industry Sector
Postfach 48 48
90026 NÜRNBERG
GERMANY

A5E01076865-02
Ⓟ 09/2008

Copyright © Siemens AG 2008.
Technical data subject to change

Preface

Purpose of the manual

This manual supplements the *ET 200S Distributed I/O System* Operating Instructions. General functions for the ET 200S are described in the *ET 200S Distributed I/O System* Operating Instructions.

The information in this document along with the operating instructions enables you to commission the ET 200S.

Basic knowledge requirements

To understand these operating instructions you should have general knowledge of automation engineering.

Scope of the manual

This manual applies to this ET 200S module. It describes the components that are valid at the time of publication.

Recycling and disposal

Thanks to the fact that it is low in contaminants, this ET 200S module is recyclable. For environmentally compliant recycling and disposal of your electronic waste, please contact a company certified for the disposal of electronic waste.

Additional support

If you have any questions relating to the products described in these operating instructions, and do not find the answers in this document, please contact your local Siemens representative.

http://www.siemens.com/automation/partner

The portal to our technical documentation for the various SIMATIC products and systems is available at:

http://www.siemens.com/automation/simatic/portal

The online catalog and ordering system are available at:
http://www.siemens.com/automation/mall

Training center

We offer courses to help you get started with the ET 200S and the SIMATIC S7 automation system. Please contact your regional training center or the central training center in D -90327, Nuremberg, Germany.
Phone: +49 (911) 895-3200.

http://www.siemens.com/sitrain

1.2 Compatibility with the predecessor module

Compatible with 2AI RTD ST analog electronic module (6ES7134-4JB50-0AB0)

If you configure the 2/4AI RTD ST (6ES7134-4JB51-0AB0) as predecessor module (6ES7134-4JB50-0AB0), then it behaves as if it is compatible.

The following technical specifications of the 2/4AI RTD ST (6ES7134-4JB51-0AB0) have changed values:

2/4AI RTD ST technical specifications 6ES7134-4JB51-0AB0			configured as 6ES7134-4JB50-0AB0	
Conversion time in ms (per module)	60 Hz	50 Hz	60 Hz	50 Hz
	67 ms	80 ms	67 ms	80 ms

Diagnostics data record 1 (DS1)

2AI RTD ST (6ES7134-4JB50-0AB0) plugged in:

- Length of the DS1: 16 bytes
- Number of channels specified in the DS1: 2

2/4AI RTD ST (6ES7134-4JB50-0AB0) plugged in to compatibility mode:

- Length of the DS1: 24 bytes
- Number of channels specified in the DS1: 4

Measuring ranges for measuring resistance

With 2/4AI RTD ST (6ES7134-4JB51-0AB0) there is no undershoot range and underflow with the measuring ranges for the resistors 150 Ω, 300 Ω and 600 Ω.

2/4AI RTD STANDARD with IM151-1 BASIC, IM151-1 COMPACT or IM151-1 FO STANDARD

If you use the electronics module 2/4AI RTD STANDARD with the interface modules IM151-1 BASIC, IM151-1 COMPACT or IM151-1 FO STANDARD, then the electronics module can be operated only as 2AI RTD STANDARD.