MANUFACTURER DOCUMENT PACKAGE

Manufacturer's Manual

Selected official pages for procurement and maintenance review

PRODUCT BRAND

Siemens

PRODUCT MODEL

6ES7134-4GB51-0AB0

High-speed Two-wire Current Input. Source PDF pages: manual pp. 1-3,106-107,128-132,402-405,413-416,418,425-426,444-448,539-540; supplement pp. 1-2. Adjacent model text on shared pages is outside this product reference.

OFFICIAL SOURCE

SIMATIC ET 200S Distributed I/O System; 07/2003, EWA-4NEB780602402-09

Source: Siemens 07/2003, EWA-4NEB780602402-09. Original manufacturer pages follow this cover.

Siemens 06/2013, A5E02473863-02; supplement source pp. 1-2

Archived Siemens 07/2003 sections with 06/2013 migration notice. Later HS predecessor mode has limited compatibility. Protection and input-destruction rows have distinct contexts; interpretation remains unresolved. No reconciliation or overcurrent test limit is asserted.

AMIKON PRODUCT SUPPORT

+86-18020776786 INFO@AMIKON.CN

AMIKONG.COM

Amikon Limited prepared this independent reference package. Selected manufacturer pages follow with their original content and pagination visible.

SIEMENS

SIMATIC

ET 200S
Distributed I/O System

Manual



The following supplement is part of this documentation:

No.	Designation	Drawing number	Edition
1	Product information	A5E00060322-10	07/2003

This manual is part of the documentation package with the order number
6ES7151-1AA00-8BA0

Edition 07/2003
EWA-4NEB780602402-09

Preface, Contents

1 Product Overview

2 Brief Instructions on Commissioning ET 200S

3 Configuration Options

4 Installation

5 Wiring and Fitting

6 Commissioning and Diagnostics

7 General Technical Specifications

8 ET 200S Power Supply

9 Interface Modules

10 Terminal Modules

11 Power Modules

12 Digital Electronic Modules

13 Analog Electronic Modules

14 4 IQ-SENSE

15 RESERVE Modules

Appendices

Glossary, Index

Safety Guidelines

This manual contains notices intended to ensure personal safety, as well as to protect the products and connected equipment against damage. These notices are highlighted by the symbols shown below and graded according to severity by the following texts:



Danger

indicates that death, severe personal injury or substantial property damage will result if proper precautions are not taken.



Warning

indicates that death, severe personal injury or substantial property damage can result if proper precautions are not taken.



Caution

indicates that minor personal injury can result if proper precautions are not taken.

Caution

indicates that property damage can result if proper precautions are not taken.

Notice

draws your attention to particularly important information on the product, handling the product, or to a particular part of the documentation.

Qualified Personnel

Only **qualified personnel** should be allowed to install and work on this equipment. Qualified persons are defined as persons who are authorized to commission, to ground and to tag circuits, equipment, and systems in accordance with established safety practices and standards.

Correct Usage

Note the following:



Warning

This device and its components may only be used for the applications described in the catalog or the technical description, and only in connection with devices or components from other manufacturers which have been approved or recommended by Siemens.

This product can only function correctly and safely if it is transported, stored, set up, and installed correctly, and operated and maintained as recommended.

Trademarks

SIMATIC®, SIMATIC HMI® and SIMATIC NET® are registered trademarks of SIEMENS AG.

Third parties using for their own purposes any other names in this document which refer to trademarks might infringe upon the rights of the trademark owners.

Copyright © Siemens AG 1998-2003 All rights reserved

The reproduction, transmission or use of this document or its contents is not permitted without express written authority. Offenders will be liable for damages. All rights, including rights created by patent grant or registration of a utility model or design, are reserved.

Siemens AG
Bereich Automation and Drives
Geschaeftsgebiet Industrial Automation Systems
Postfach 4848, D- 90327 Nuernberg

Disclaim of Liability

We have checked the contents of this manual for agreement with the hardware and software described. Since deviations cannot be precluded entirely, we cannot guarantee full agreement. However, the data in this manual are reviewed regularly and any necessary corrections included in subsequent editions. Suggestions for improvement are welcomed.

© Siemens AG 2003
Technical data subject to change.

Preface

Purpose of the manual

The information in this manual enables you to run the ET 200S distributed I/O system on PROFIBUS-DP as a DP slave.

Required level of knowledge

Knowledge of the field of automation engineering is required to understand the manual.

Scope of the manual

This manual is valid for the components of the ET 200S distributed I/O system specified in Appendix A.

This manual contains a description of the components that were valid at the time the manual was published. We reserve the right to enclose a Product Information bulletin containing up-to-date information about new components and new versions of components.

Changes since the previous version

The following changes/additions have been made since the previous version of the manual:

- New function: option handling
- New ET 200S Power Supply module
- New PM-E 24–48 VDC power module
- New 4 DI NAMUR electronic module
- Changes to the IM151-1 STANDARD and IM151-1 FO STANDARD interface modules

5.1 General rules and regulations for operating the ET 200S

Introduction

When operating the ET 200S distributed I/O system as a component part of a plant or system, certain rules and regulations have to be followed depending on where the device is to be used.

This chapter provides an overview of the most important rules you have to observe when integrating the ET 200S distributed I/O system in a plant or system.

Specific applications

Note the safety and accident prevention regulations that apply to specific applications (for example, machine protection guidelines).

Emergency stop devices

Emergency stop devices complying with IEC 204 (which corresponds to DIN VDE 113) must remain effective in all the operating modes of the plant or system.

Startup of the system after specific events

The following table tells you what you should do when the system starts up after the occurrence of specific events.

If ...	Then ...
Startup follows a voltage drop or failure Startup of the ET 200S follows an interruption of bus communication	No dangerous operating states must occur. If necessary, force an emergency stop.
Startup follows unlocking of the emergency stop device	There must not be an uncontrolled or undefined start-up.

Line voltage

The following table tells you what you have to do with regard to the line voltage.

With ...	Requirements
Permanently installed plants or systems without all-pole line disconnect switches	There must be a line disconnect switch or a fuse in the building installation system.
Load power supplies, power supply modules	The set rated voltage range must correspond to the local line voltage.
All circuits of the ET 200S distributed I/O system	Any fluctuation/deviation in the line voltage from the rated value must be within the permitted tolerances (see Section 7.4)

24 VDC supply

The following table tells you what you have to do with regard to the 24 VDC supply.

With ...	Pay attention to ...	
Buildings	Outdoor lightning protection	Take lightning protection precautions (for example, lightning conductors)
24 VDC supply lines, signal lines	Indoor lightning protection	
24 VDC supply	Safe (electrical) isolation of extra-low voltage	

Protection against outside electrical influences

The following table tells you what to do to provide protection against electrical influences or faults.

With ...	You must ensure that...
All plants or systems in which the ET 200S is integrated	The plant or system is connected to a protective conductor for diverting electromagnetic interference.
Supply, signal, and bus lines	The wiring arrangement and installation are correct.
Signal and bus lines	Any break of a line or conductor does not result in undefined states of the plant or system.

Caution

Do not look directly into the opening of the transmission diodes.
The light beam that comes out could damage your eyes.

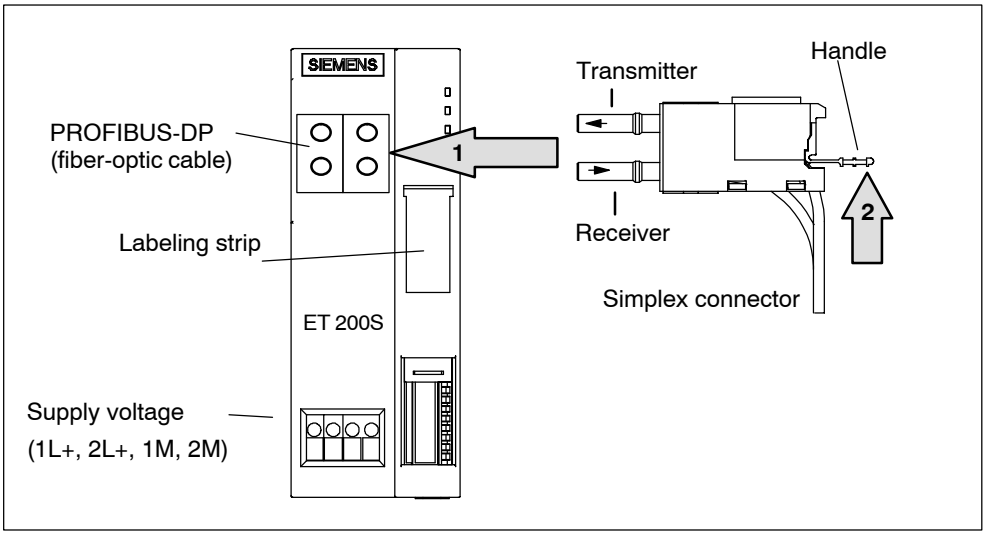

Figure 5-13 Wiring the IM151-1 FO STANDARD

5.5 Inserting and identifying the electronic modules

Features

- The electronic modules are inserted in the terminal modules.
- A labeling strip allows you to identify the electronic modules.
- Electronic modules are:
  - Self-coding
  - Type-coded

  The first time you insert an electronic module, a code element engages on the terminal module. This mechanically prevents the wrong electronic module from being inserted.

Requirements

Adhere to the rules below for inserting electronic modules. See Section 3.5 (The electronic modules you can use on the various terminal modules).

Inserting and identifying the electronic modules

1. Insert the electronic module in the terminal module until you hear it snap into place.
2. Pull the labeling strip up out of the electronic module in order to identify it.
3. Then put the labeling strip back into the electronic module.

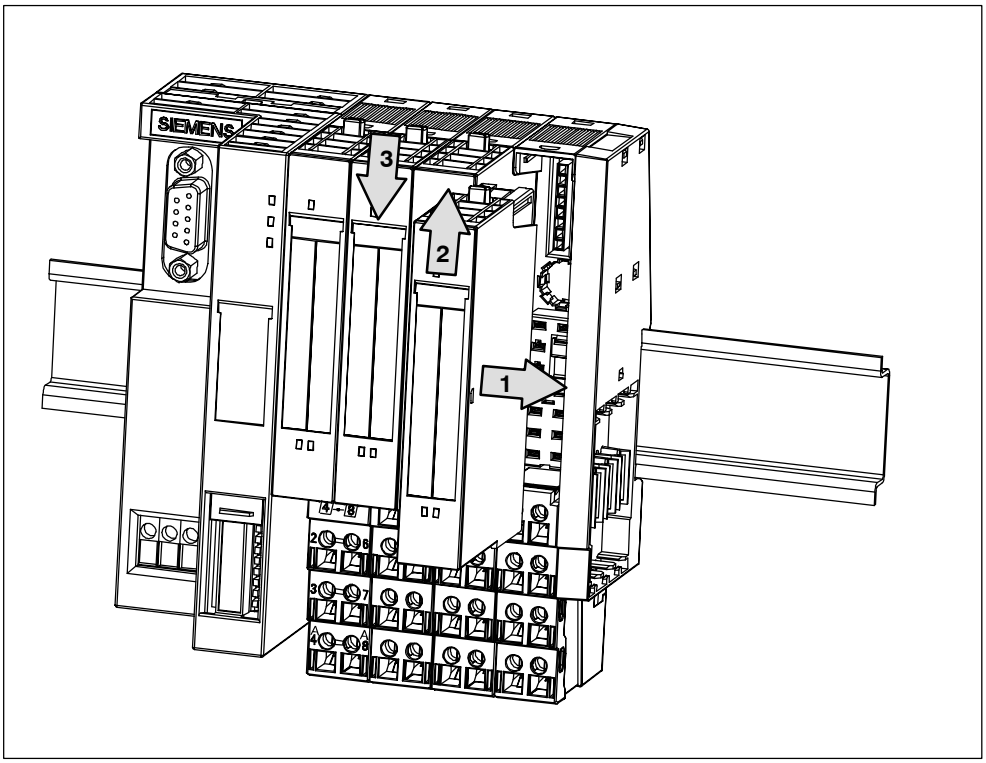

Figure 5-14 Inserting and identifying electronic modules

Removing electronic modules

1. Simultaneously press the two release buttons on the top and bottom of the electronic module.
2. Pull the electronic module out from the terminal module at the front.

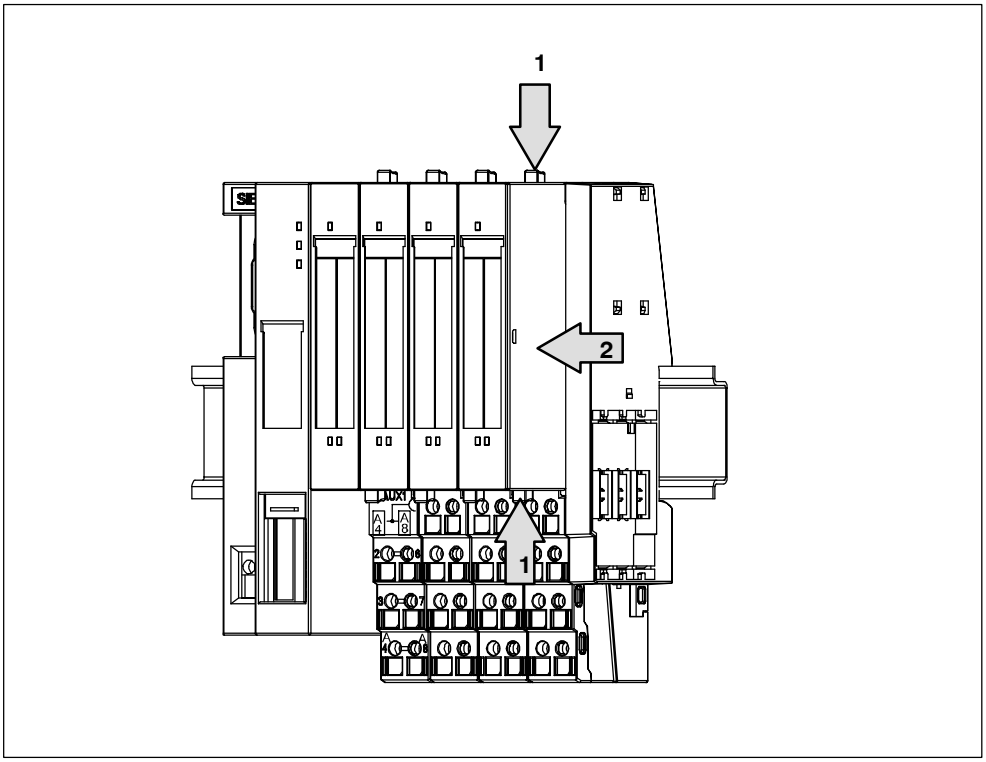

Figure 5-15 Removing electronic modules

Changing the type of an electronic module

You have already removed the electronic module:

1. Use a screwdriver to push the code element out of the terminal module.
2. Put the code element on the used electronic module again.
3. Insert the new electronic module (different type) in the terminal module until you hear it snap into place.
4. Identify the new electronic module.

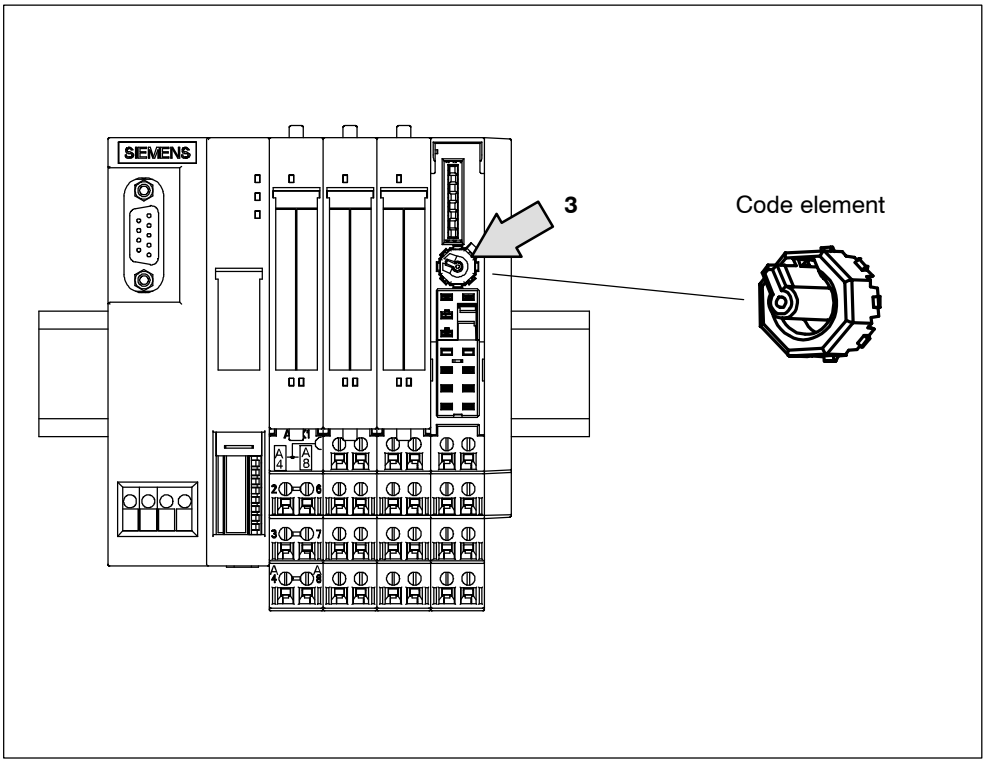

Figure 5-16 Removing the code element

Warning

When you make changes to the code, it can lead to dangerous states in your system.

Replacing a defective electronic module

You have already removed the electronic module:

1. Remove the code element from bottom of the new electronic module.
2. Insert the new electronic module (same type) in the terminal module until you hear it snap into place.
3. Identify the new electronic module.

Removing and inserting electronic modules during operation

ET 200S supports the removal and insertion of modules during operation (during the RUN operating mode). The ET 200S remains in RUN mode when an electronic module is removed. The protective conductor connections of the ET 200S are not interrupted.

Note

- You cannot remove and insert modules during operation unless the corresponding parameters have been assigned. See Section 9.1.
- You can remove and insert modules during operation as of the IM151-1 BASIC, IM151-1 STANDARD (6ES7 151-1AA01-0AB0), IM151-1 FO STANDARD, and IM151-1 HIGH FEATURE.
- If **one** module is missing (gap) and the ET 200S is switched on, the station will not start up (see Section 6.6.10).
- The removal and insertion of modules affects the clocking (equidistance).

If you replace more than one module, only one gap can result.

The following table indicates which modules you can remove and insert under which conditions:

Table 5-1 Removing and inserting electronic modules

Modules	Removing and inserting	Conditions
Interface module	No	——
Power modules	Yes	The load voltage must be switched off.
Digital electronic modules (input)	Yes	——
Digital electronic modules (output)	Yes	The load voltage must be switched off by means of an external switch/fuse.
Analog electronic modules	Yes	——
4 IQ-SENSE	Yes	The sensors can also be replaced during operation. These are then parameterized automatically by the electronic module.

13.2 Fundamentals of analog value processing

13.2.1 Connecting measuring sensors

Introduction

You can connect different measuring sensors to the analog input modules, depending on the type of module involved:

- Voltage sensor
- Current sensors as:
  - Two-wire measuring transducer
  - Four-wire measuring transducer
- Resistance-type sensor

In this chapter you will find out how to connect the measuring sensors and what to watch for when doing so.

Lines for analog signals

You should use shielded and twisted-pair lines for the analog signals. This reduces the effect of interference. You should ground the shield of the analog lines at both ends of the line. If there are differences in potential between the ends of the line, a compensating current flows via the shield that can interfere with the analog signals. If this is the case, you should only ground the shield at one end of the line.

Analog input modules

In the case of the analog input modules there is electrical isolation:

- Between the logic circuitry and backplane bus
- Between the load voltage and the channels. The following differences exist:
  - No isolation: Connection between M_{ANA} and the central grounding point
  - Isolation: No connection between M_{ANA} and the central grounding point (U_{ISO})

Analog output modules

In the case of the analog output modules there is generally electrical isolation:

- Between the logic circuitry and backplane bus
- Between the load voltage and $M_{ANA.}$

Note

Ensure that this potential difference (U_{ISO}) does not exceed the permitted value. If there is a possibility of exceeding the permitted value, make a connection between terminal M_{ANA} and the central grounding point.

Connecting measuring sensors to analog inputs

Between the measuring lines M– of the input channels and the reference point of the measuring circuit M_{ANA} there can be only a limited potential difference U_{CM} (common-mode voltage). To ensure that the permitted value is not exceeded, you must take different steps depending on the whether the sensors are isolated or non-isolated. The steps you have to take are described in this chapter.

Generally speaking, however, when connecting two-wire measuring transducers for current measurement and when connecting resistance-type sensors, you should not make a connection from M– to M_{ANA}. This also applies to correspondingly parameterized but unused inputs.

Note

For the analog input modules 2AI U, 2AI RTD, and 2AI TC, you must short-circuit unused analog inputs.

Abbreviations used

The meanings of the abbreviations in the figures below are as follows:

M +:	Measuring line (positive)
M –:	Measuring line (negative)
M_{ANA}:	Reference potential of the analog measuring circuit
M:	Frame connection
L +:	Rated load voltage 24 VDC
U_{CM}:	Potential difference between inputs and reference potential of the measuring circuit M_{ANA}
U_{ISO}:	Potential difference between M_{ANA} and the central grounding point

Isolated measuring sensors

The isolated measuring sensors are not connected to the local ground potential. They can be floating. Depending on local conditions or interference, potential differences U_{CM} (static or dynamic) can occur between the measuring lines M– of the input channels and the reference point of the measuring circuit M_{ANA}.

To ensure that the permitted value for U_{CM} is not exceeded in environments with strong EMC interference, the following applies:

- In the case of the analog input modules 2AI U, 2AI I 4WIRE, and 2AI TC: Connect M– to M_{ANA}.
- When connecting two-wire measuring transducers for current measurement and when connecting resistance-type sensors, you must not connect M– to M_{ANA}.

Isolated measuring sensors (continued)

Figure 13-1 illustrates the connection of isolated measuring sensors to the floating analog input modules.

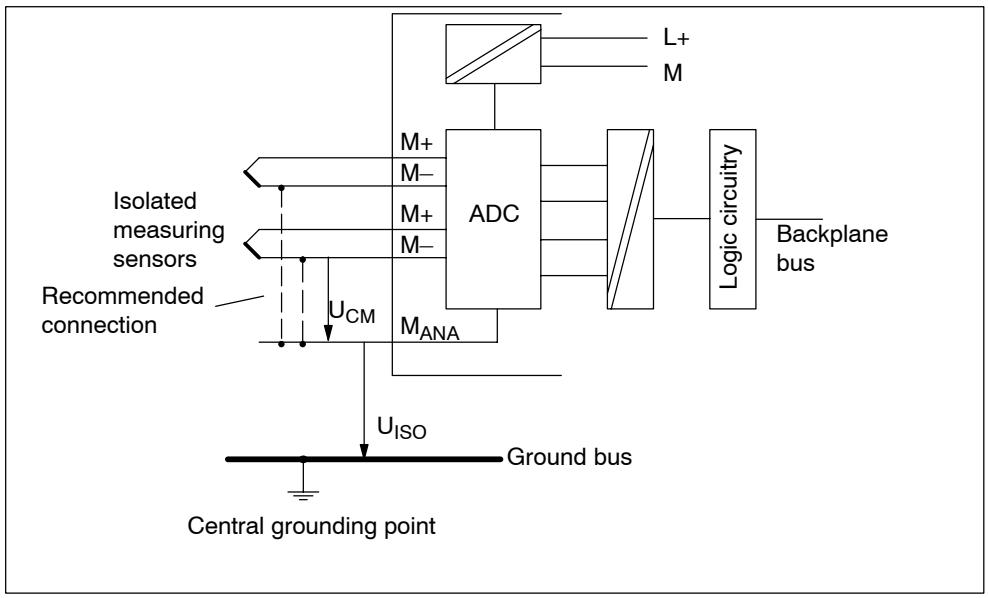

Figure 13-1 Connection of isolated measuring sensors to a floating analog input module

Non-isolated measuring sensors

The non-isolated measuring sensors are connected to the local ground potential. You must connect M_{ANA} to the ground potential. Depending on local conditions or interference, potential differences U_{CM} (static or dynamic) can occur between the locally distributed measuring points.

If the permitted value for U_{CM} is exceeded, there must be equalizing lines between the measuring points.

Figure 13-2 illustrates the connection of non-isolated measuring sensors to a floating analog input module.

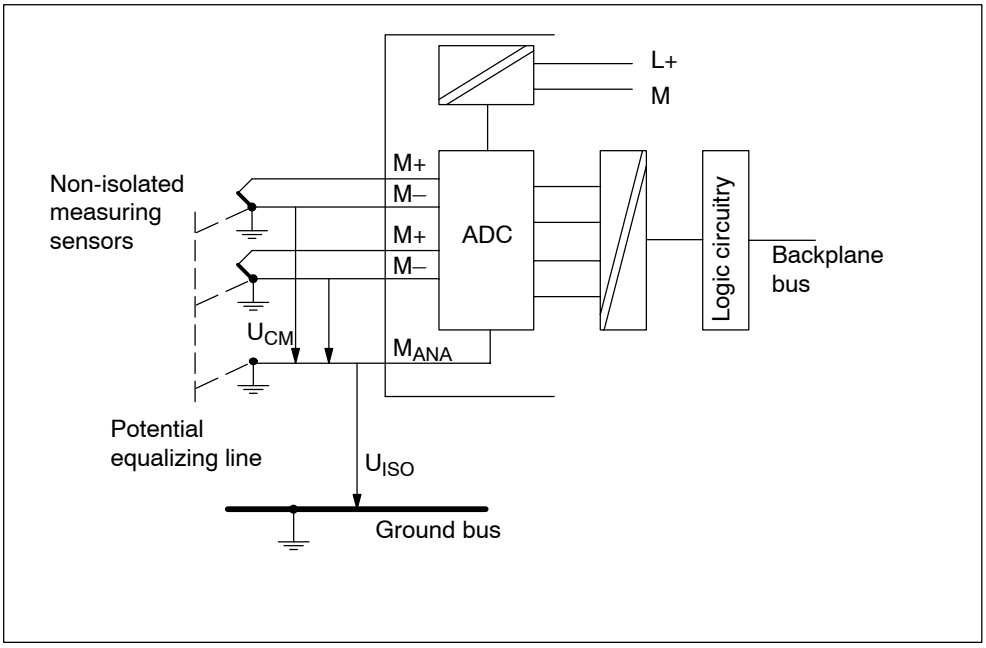

Figure 13-2 Connection of non-isolated measuring sensors to a floating analog input module

Operating four-wire measuring transducers on an external voltage supply

If there is isolation between the output and the supply of the measuring transducer, you can connect it to the 2AI I 4WIRE without additional connections.

If there is no isolation between the output and the supply of the measuring transducer, you can connect it to the 2AI I 4WIRE only if the reference potential of the power supply voltages (24 VDC) is the same.

If there is an increase in interference radiation, a connection between M– and M_{ana} on the terminal module of the 2AI I 4WIRE is recommended.

13.2.3 Notes on and circuits of unused channels of the analog input modules

- Deactivate unused input channels during parameter assignment.
- A deactivated channel always returns a value of $7FFF_H$.
- In the case of the standard modules 2AI U, 2AI I 2WIRE, 2AI I 4WIRE, 2AI RTD Standard, 2AI RTD High Feature, 2AI TC Standard, and 2AI TC High Feature, the cycle time of the module is halved.
- In the case of the high-speed modules 2AI U, 2AI I 2WIRE, and 2AI I 4WIRE, the cycle time remains unchanged at 1 ms.
- To adhere to the permissible potential differences (U_{CM}), you must wire jumpers on the terminal module for the unused channels. This is necessary in the case of the following modules:

Analog input module	TM terminal							
	Channel 0				Channel 1			
	1	2	3	4	5	6	7	8
2AI U Standard	●	●	●		●	●	●	
2AI RTD Standard, 2AI RTD High Feature, 2AI TC High Feature	●	●			●	●		
2AI TC Standard	●	●	●		●	●	●	
2AI U High Speed	●	●	●		●	●	●	

13.3 Behavior of the analog modules during operation and in the event of problems

This section deals with the following topics:

- The dependence of the analog input and output values on the supply voltage of the electronic module and on the operating modes of the PLC
- The behavior of the analog electronic modules depending on the position of the analog values in the respective value range
- The effect of errors on the analog inputs/outputs
- Use of the shield contact

Effect of the supply voltage and the operating mode

The input and output values of the analog modules are dependent on the supply voltage for electronic components/sensors and on the operating mode of the PLC (CPU of the DP master).

Table 13-27 How the analog input/output values depend on the operating mode of the PLC (CPU of the DP master) and the supply voltage L +

Operating mode of the PLC (CPU of the DP master)		Supply voltage L + to ET 200S (power module)	Input value of the electronic module with analog inputs (evaluation possible in the CPU of the DP master)	Output value of the electronic module with analog outputs
Power on	RUN	L + applied	Process values	PLC values
			$7FFF_H$ until the first conversion after switching on or after parameterization of the module	Until the first value output: • After switching on, a signal of 0 mA or 0 V is output • Dependent on the “Behavior at CPU-Master-STOP” parameter
		L + not applied	$7FFF_H$	–
Power on	STOP	L + applied	Process value	Dependent on the “Behavior at CPU-Master-STOP” parameter
		L + not applied	$7FFF_H$	–
Power off	–	L + applied	–	Dependent on the “Behavior at CPU-Master-STOP” parameter
		L + not applied	–	–

Effect of the value range for the analog input

The behavior of the electronic modules with analog inputs depends on where the input values are in the value range. The following table 13-28 illustrates this dependency.

Table 13-28 Behavior of the analog modules depending on the position of the analog input value in the value range

Measured value in	Input value in SIMATIC S7 format	Input value in SIMATIC S5 format
Rated range	Measured value	Measured value
Overrange/underrange	Measured value	Measured value
Overflow	$7FFF_H$	End of the overrange +1 plus overflow bit
Underflow	8000_H	End of the underrange –1 plus overflow bit
Before assigning parameters or in the case of incorrect parameter assignment[1)]	$7FFF_H$	$7FFF_H$

1) The following applies to 2AI U Standard, 2AI I 2WIRE Standard, 2AI I 4WIRE Standard, 2AI RTD Standard, and 2AI TC Standard with product version 1: If you assign a parameter incorrectly and trigger the diagnostic message for a parameterization error (for example, wire break for measuring range ± 20 mA), the SF LED lights up on the module and you can evaluate the diagnosis. In this state, correct input values are delivered to the DP master.

Effect of the value range for the analog output

The behavior of the electronic modules with analog outputs depends on where the output values are in the value range. The following table indicates this:

Table 13-29 Behavior of the analog modules depending on the position of the analog output value in the value range

Output value in	Output value in SIMATIC S5/S7 format
Rated range	Value from DP master
Overrange/underrange	Value from DP master
Overflow	0 signal
Underflow	0 signal
Before assigning parameters or in the case of incorrect parameter assignment[1)]	0 signal

1) The following applies to 2AO U Standard, 2AO I Standard with product version 1: If the substitute value that was assigned as parameter is outside the nominal range, a diagnostic message for parameter error is entered and the SF LED lights up. In this state, the output values transmitted by the DP master are output at the analog output modules.

Use of the shield contact

To avoid interference with analog electronic modules, we recommend:

- Shielded cable to the sensors/actuators
- Cable shields applied to the shield contact element
- Connecting the shield contact to the ground bus

13.4 Parameters for analog electronic modules

Parameters for

- 2AI U Standard analog electronic module
- 2AI I 2WIRE Standard analog electronic module
- 2AI I 4WIRE Standard analog electronic module

Table 13-30 Parameters for analog input modules U, I Standard

2AI U Standard	2AI I 2WIRE Standard	2AI I 4WIRE Standard	Value range	Default	Applicability
Group diagnosis (parameter assignment error, internal error)			• Disable • Enable	Disable	Module
Diagnostics: Overflow/underflow			• Disable • Enable	Disable	Module
Diagnostics: Wire break[2)]	Diagnostics: Wire break	Diagnostics: Wire break[1)]	• Disable • Enable	Disable	Channel
Smoothing			• None • Weak • Medium • Strong	None	Channel
Type/range of measurement	——	——	• Deactivated • ± 5 V • 1 to 5 V • ± 10 V	±10 V	Channel
——	Type/range of measurement	——	• Deactivated • 2WIRE: 4 to 20 mA	2WIRE: 4 to 20 mA	Channel
——	——	Type/range of measurement	• Deactivated • 4WIRE: 4 to 20 mA • 4WIRE: ±20 mA	2WIRE: 4 to 20 mA	Channel

1) Only in the measuring range 4 to 20 mA
2 Only in the measuring range 1 to 5 V

Parameters for

- 2AI U High Speed analog electronic module
- 2AI I 2WIRE High Speed analog electronic module
- 2AI I 4WIRE High Speed analog electronic module

Table 13-32 Parameters for U, I, and High Speed analog input modules

2AI U High Speed	2AI I 2WIRE High Speed	2AI I 4WIRE High Speed	Value range	Default	Applicability
Group diagnosis (parameter assignment error, internal error)			• Disable • Enable	Disable	Module
Diagnostics: Overflow/underflow			• Disable • Enable	Disable	Module
—	Diagnostics: Wire break	Diagnostics: Wire break	• Disable • Enable	Disable	Channel
Smoothing			• None • Weak • Medium • Strong	None	Channel
Type/range of measurement	—	—	• Deactivated • ±10 V • ±5 V • ± 2.5 V • 1 to 5 V	±10 V	Channel
—	Type/range of measurement	—	• Deactivated • 4 to 20 mA • 0 to 20 mA	4 to 20 mA	Channel
—	—	Type/range of measurement	• Deactivated • 4 to 20 mA • 0 to 20 mA • ± 20 mA	4 to 20 mA	Channel

Note

If you deactivate a channel of the High Speed module, you do not achieve any speed advantage on account of the measuring procedure used.

Smoothing

The individual measured values are smoothed by means of digital filtering. The smoothing can be adjusted in 4 steps, where the smoothing factor k multiplied by the cycle time of the electronic module corresponds to the time constant of the smoothing filter. The greater the smoothing, the greater the time constant of the filter.

The figures below show the step response for the different smoothing factors depending on the number of module cycles.

- Smoothing in the case of the 2AI U Standard, 2AI U High Feature, 2AI I 2WIRE Standard, 2AI I 4WIRE Standard, 2AI I 2/4WIRE High Feature, 2AI RTD Standard, 2AI RTD High Feature, 2AI TC Standard, 2AI TC High Feature

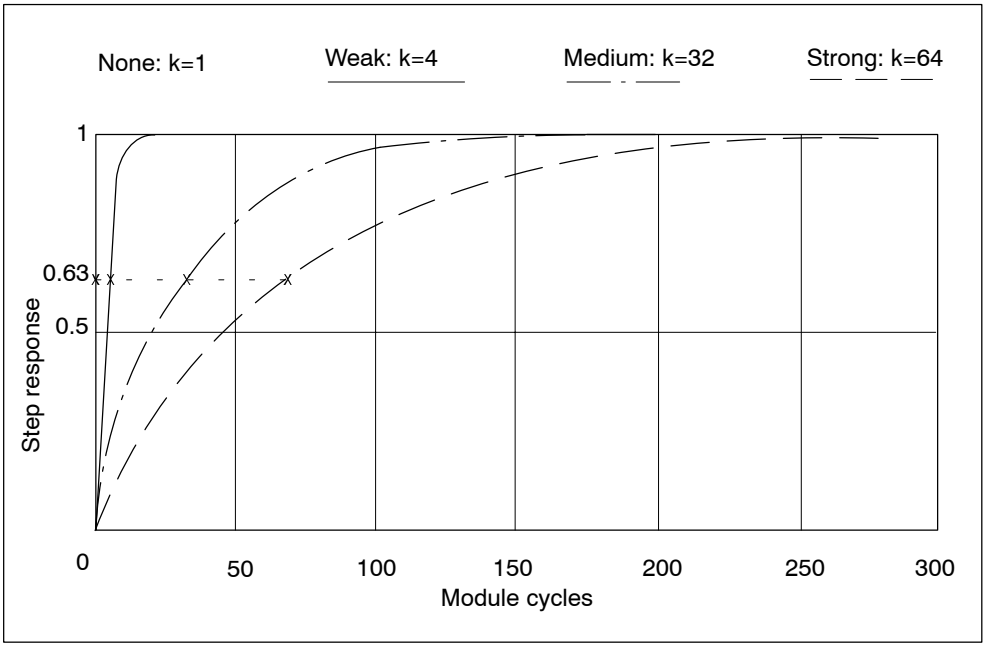

Figure 13-5 Smoothing in the case of the 2AI U Standard, 2AI U High Feature, 2AI I 2WIRE Standard, 2AI I 4WIRE Standard, 2AI I 2/4WIRE High Feature, 2AI RTD Standard, 2AI RTD High Feature, 2AI TC Standard, 2AI TC High Feature

- Smoothing in the case of the 2AI U High Speed, 2AI I 2WIRE High Speed, 2AI I 4WIRE High Speed

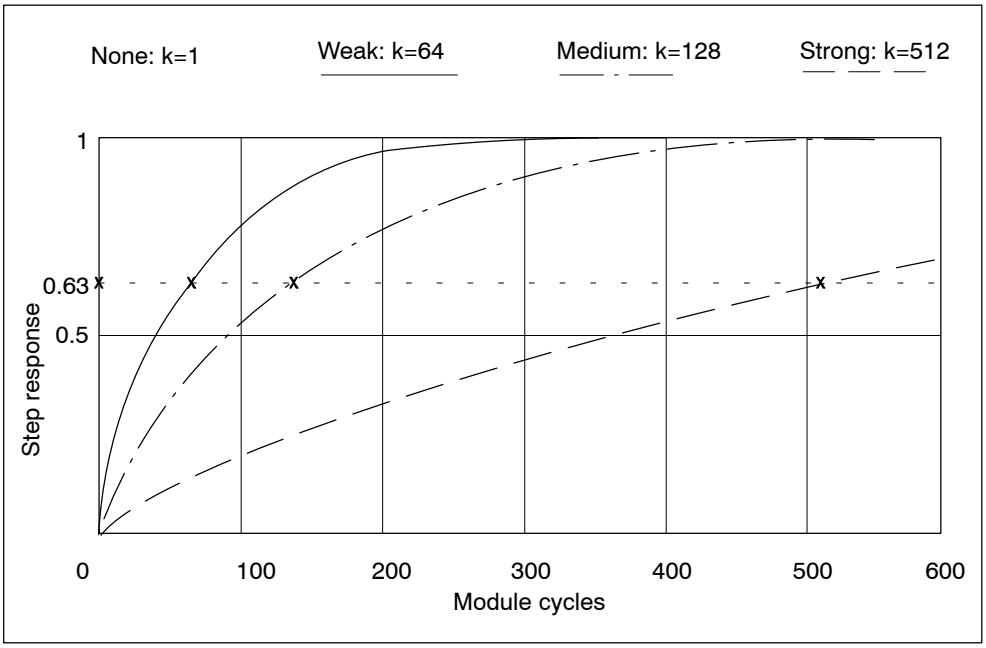

Figure 13-6 Smoothing in the case of the 2AI U High Speed, 2AI I 2WIRE High Speed, 2AI I 4WIRE High Speed

Interference frequency suppression

The 2AI U High Feature and 2AI I 2/4WIRE High Feature analog input modules support the interference frequency suppression setting (50 Hz or 60 Hz) for the interface module. These High Feature analog input modules also allow you to disable interference frequency suppression, thus ignoring the setting made on the interface module. If you disable interference frequency suppression, the conversion and cycle times become faster for these modules.

Run-time calibration

- 2AI U High Feature

  Run-time calibration can be enabled at module parameterization for the 2AI U High Feature analog electronic module to adjust for component drift due to changes in ambient temperature. During the calibration interval, new data updates will be delayed for 250 ms. Calibration takes place every time there is a 5° C change in ambient temperature.

- 2AI I 2/4WIRE High Feature

  Run-time calibration can be enabled at module parameterization for the 2AI I 2/4WIRE High Feature analog electronic module to periodically adjust for the offset voltage drift of the A/D converter. During the calibration interval, new data updates will be delayed for 200 ms. The accuracy limits of the module will be met without run-time calibration.

13.9 2AI I 2WIRE High Speed analog electronic module (6ES7134-4GB51-0AB0)

Order number

6ES7134-4GB51-0AB0

Features

- 2 inputs for measuring current
- Current-limited sensor supply (90 mA)
- Input ranges:

  4 to 20 mA, resolution 13 bits

  0 to 20 mA, resolution 13 bits
- Supports clocked operation
  - Minimum time for the clocked DP cycle (T_{DPmin}): 2.5 ms
  - Minimum conversion time of the input modules (T_{WEmin}): 1.1 ms

Terminal assignment

The following table indicates the terminal assignment of the 2AI I 2WIRE High Speed for the different terminal modules:

Table 13-40 Terminal assignment of the 2AI I 2WIRE High Speed

View	Terminal assignment	Remarks
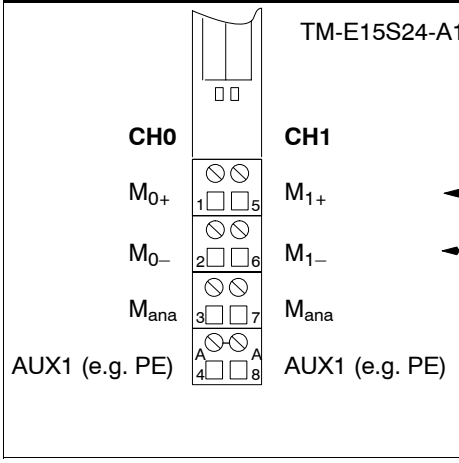	TM-E15S24-A1 and 2AI I 2WIRE High Speed AUX1 must be applied to PE.	Channel 0: Terminals 1 to A4 Channel 1: Terminals 5 to A8 M+: Input signal “+” M–: Input signal “–” M_{ana}: Ground (of power module) Two-wire measuring transducer is supplied by means of the measuring circuits.

Table 13-40 Terminal assignment of the 2AI I 2WIRE High Speed, continued

View	Terminal assignment	Remarks
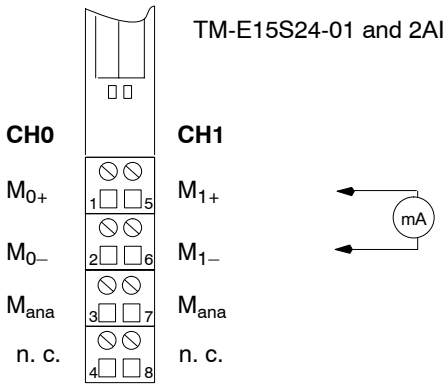		Channel 0: Terminals 1 to 4 Channel 1: Terminals 5 to 8 M+: Input signal “+” M–: Input signal “–” M_{ana}: Ground (of power module) Two-wire measuring transducer is supplied by means of the measuring circuits. Terminals 4 and 8 can be used for unneeded wires of up to 30 VDC.
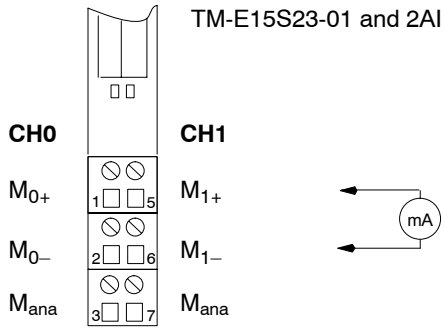		Channel 0: Terminals 1 to 3 Channel 1: Terminals 5 to 7 M+: Input signal “+” M–: Input signal “–” M_{ana}: Ground (of power module) Two-wire measuring transducer is supplied by means of the measuring circuits.
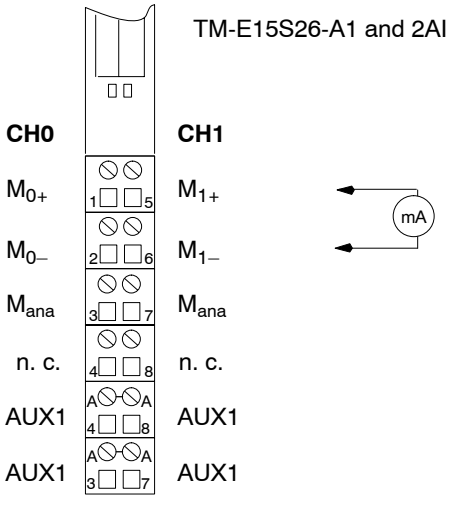		Channel 0: Terminals 1 to A3 Channel 1: Terminals 5 to A7 M+: Input signal “+” M–: Input signal “–” M_{ana}: Ground (of power module) Two-wire measuring transducer is supplied by means of the measuring circuits. Terminals 4 and 8 can be used for unneeded wires of up to 30 VDC.

Block diagram

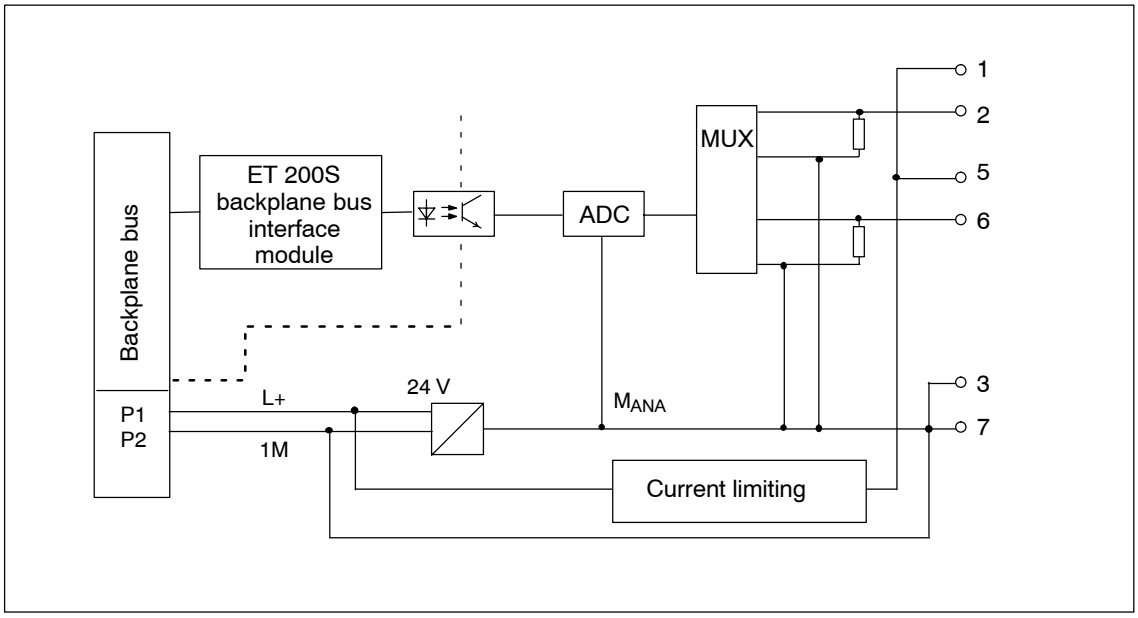

Figure 13-11 Block diagram of the 2AI I 2WIRE High Speed

Technical specifications

Dimensions and weight	
Dimensions W × H × D (mm)	15 x 81 x 52
Weight	Approx. 40 g
Data for specific modules	
Supports clocked operation	Yes
Number of inputs	2
Length of cable	
• Shielded	Max. 200 m
Voltages, currents, potentials	
Rated load voltage L+ (from the power module)	24 VDC
• Reverse polarity protection	Yes
• Short-circuit protection	Yes, (destruction limit 35 mA per channel)
Isolation	
• Between channels and backplane bus	Yes
• Between channels and load voltage L+	No
• Between the channels	No
Permissible potential difference	
• Between M_{ANA} and $M_{internal}$ (U_{ISO})	75 VDC, 60 VAC
Insulation tested with	500 VDC
Current consumption	
• Power supply and load voltage L+ (no load)	Max. 35 mA[1]
Power dissipation of the module	Typ. 0.8 W
Status, interrupts, diagnostics	
Interrupts	
• Hardware interrupt	Parameters can be assigned[2]
Diagnostic functions	
• Group error display	Red “SF” LED
• Diagnostic functions readable	Possible[3)]

Analog value generation	
Measuring principle	Instantaneous value encoding
Cycle time/resolution:	
• Conversion time in ms (per channel)	0.1
• Cycle time in ms (per module)	1
• Resolution (including overrange)	4 to 20 mA/13 bits 0 to 20 mA/13 bits
Suppression of interference, limits of error	
Crosstalk between the inputs	> 50 dB
Operational limit (entire temperature range with reference to input range)	±0.3%
Basic error limit (operational limit at 25 °C with reference to input range)	±0.2%
Temperature error (with reference to the input range)	±0.01%/K
Linearity error (with reference to the input range)	±0.01%
Repeatability (in steady state at 25 °C with reference to input range)	±0.05%
Sensor power supply outputs	
Number of outputs	2
Output voltage	
• With load	L+ (–2.5 V)
Output current	
• Rated value	90 mA (both channels)
• Permitted range	0 mA to 90 mA
Short-circuit protection	Yes, electronic

Data for selecting a sensor	
Input range (rated value/input resistance)	
• Current	4 to 20 mA/50 Ω 0 to 20 mA/50 Ω
Connection of the sensors	
• For current measurement as two-wire transmitter	Possible
Load of the two-wire measuring transducer	Max. 670Ω
Maximum input current for current input (destruction limit)	60 mA

Smoothing of the measured values	Yes, parameterizable in 4 steps by means of digital filtering
Step	Time constant
None	1 x cycle time
Weak	64 x cycle time
Medium	128 x cycle time
Strong	512 x cycle time

1) Without sensor supply voltage
2) DPV1 only
3) Parameter assignment error
Violation of lower limit value
Violation of upper limit value
Open circuit (only with 4 to 20 mA)
Hardware interrupt lost

13.10 2AI I 4WIRE Standard analog electronic module (6ES7134-4GB10-0AB0)

Order number

6ES7134-4GB10-0AB0

Features

- 2 inputs for measuring current
- Input ranges:
  - ± 20 mA, resolution 13 bits + sign
  - 4 to 20 mA, resolution 13 bits
- Permitted common-mode voltage 2 VAC_{pp}

Address Space of the Input and Outputs of the ET 200S

C

Address area of the modules

Table C-1 Inputs and outputs for the ET 200S

Module	Address space of the inputs		Address space of the outputs	
	Without grouping	With grouping[1)]	Without grouping	With grouping[1)]
Power modules				
With status byte (S)[2)]	1 byte		——	
With option handling (O)[2)]	8 bytes		8 bytes	
With status byte and option handling (SO)[2)]	9 bytes		9 bytes (9th byte not relevant)	
Digital input modules	1 byte	2 bits (2DI) 4 bits (4DI)	——	——
Digital output modules	——	——	1 byte	2 bits (2DI) 4 bits (4DI)
Analog input modules	4 bytes		——	——
Analog output modules	——	——	4 bytes	
1Count 24V/100kHz	8 bytes		8 bytes	
1Count 5V/500kHz	8 bytes		8 bytes	
1SSI	8 bytes		8 bytes	
1SSI fast	4 bytes		——	
1STEP 5V/204kHz	8 bytes		8 bytes	
2PULSE	8 bytes		8 bytes	
1POS INC/Digital	8 bytes		8 bytes	
1POS SSI/Digital	8 bytes		8 bytes	
1POS INC/Analog	8 bytes		8 bytes	
1POS SSI/Analog	8 bytes		8 bytes	
1SI 3964/ASCII serial interface module	4/8 bytes		4/8 bytes	
1SI Modbus/USS serial interface module	4/8 bytes		4/8 bytes	
4 IQ-SENSE (standard)	1 byte	——	——	
4 IQ-SENSE (Enhanced)	4 bytes		4 bytes	

Table C-1 Inputs and outputs for the ET 200S, continued

Module	Address space of the inputs		Address space of the outputs	
	Without grouping	With grouping[1)]	Without grouping	With grouping[1)]
Direct-on-line starter	1 byte	4 bits	1 byte	4 bits
Reversing starter	1 byte	4 bits	1 byte	4 bits

1) See Section 6.1 (on configuring the ET 200S)
2) Additional optional entries you can select from the DBB file

Address area for option handling and status byte

You can control and monitor option handling, and evaluate the status byte of the power module using the control (PIQ) and feedback interface (PII).

The address range of the control (PIQ) and feedback interface (PII) depends on the configuration or selection of the corresponding entry in the configuration software.

In STEP 7, HWCONFIG or COM PROFIBUS or other configuration software	Control interface PII	Control interface PIQ
Usual entry for the power module	---	---
Ends in ...S	EBx Status byte	---
Ends in ...O	EBx : EBx+7 Option handling	ABx : ABx+7 Option handling
Ends in ...SO	EBx : EBx+7 Option handling EBx+8 Status byte	ABx : ABx+7 Option handling ABx+8 Not applicable

SIEMENS

Distributed I/O
Product information on device manuals ET 200S 2AI U HS, 2AI I 2WIRE HS, 2AI I 4WIRE HS
Product Information

Limited compatibility

Analog electronic modules

If you configure the following analog electronic modules as predecessor module, they will have limited compatibility:

- 2AI U HS (6ES7134-4FB52-0AB0)
- 2AI I 2WIRE HS (6ES7134-4GB52-0AB0)
- 2AI I 4WIRE HS (6ES7134-4GB62-0AB0)

Limitations

- The shorter response time of the analog inputs can result in greater inaccuracies of the analog measured values.
- A conversion to short-circuit protection for each channel limits the maximum current for the encoder supply. Advantage: Only the affected sensor will fail in case of a short circuit.
  - 2AI I 2WIRE HS analog electronic module

Encoder supply	6ES7134-4GB52-0AB0	6ES7134-4GB51-0AB0
Output current		
• Rated value	45 mA; per channel	90 mA (both channels)
• Permissible range	0 mA to 45 mA	0 mA to 90 mA

  - 2 AI I 4WIRE HS analog electronic module

Encoder supply	6ES7134-4GB62-0AB0	6ES7134-4GB61-0AB0
Output current		
• Rated value	80 mA; per channel	90 mA (both channels)
• Permissible range	0 mA to 80 mA	0 mA to 90 mA

Replacement of the current high-speed analog modules

We recommend that you replace the current high-speed analog modules with the following analog modules. A new configuration may become necessary in this case.

Replacement of current analog modules...	by...
2AI U HS (6ES7134-4FB51-0AB0)	2AI U HF (6ES7134-4LB02-0AB0)
2AI I 2WIRE HS (6ES7134-4GB51-0AB0)	2AI I 2/4WIRE HF (6ES7134-4MB02-0AB0)
2AI I 4WIRE HS (6ES7134-4GB61-0AB0)	

© Siemens AG 2009 - 2013. All rights reserved

Siemens AG
Industry Sector
Postfach 48 48
90026 NÜRNBERG

Product information on device manuals ET 200S 2AI U HS, 2AI I 2WIRE HS, 2AI I 4WIRE HS
A5E02473863-02, 06/2013