MANUFACTURER DOCUMENT PACKAGE

Manufacturer's Manual

Selected official pages for procurement and maintenance review

PRODUCT BRAND

Siemens

PRODUCT MODEL

6ES7195-7HF80-0XA0

BM FDC Single-Coupler Bus Module. Relevant section pages: 1, 2, 12, 77, 78, 79, 80, 81, 82, 83, 84, 249, 250, 251, 286, 287, 288. Adjacent model text on shared pages is outside this product reference.

OFFICIAL SOURCE

DP/PA coupler, DP/PA link, Y-link and active field distributors Operating Instructions; 12/2021

Siemens original documentation and product reference

BM FDC supports one coupler, not the two-coupler BM FDC/FDC. Shared module data and assembly drawings do not imply that a complete link is supplied.

AMIKON PRODUCT SUPPORT

+86-18020776786 INFO@AMIKON.CN

AMIKONG.COM

Amikon Limited prepared this independent reference package. Selected manufacturer pages follow with their original content and pagination visible.

SIEMENS

SIMATIC

Bus links
DP/PA coupler, DP/PA link, Y-link and active field distributors

Operating Instructions

Security information 1

Preface 2

Description of the components 3

Application planning 4

Mounting 5

Connecting 6

Commissioning 7

Operation of the bus link (DP/PA link or Y-link) 8

Maintenance and service 9

Functions 10

Interrupt, error and system messages 11

Technical specifications 12

Appendix A

Connection to non-STEP 7 systems via GSD files B

12/2021
A5E37478314-AT

Legal information

Warning notice system

This manual contains notices you have to observe in order to ensure your personal safety, as well as to prevent damage to property. The notices referring to your personal safety are highlighted in the manual by a safety alert symbol, notices referring only to property damage have no safety alert symbol. These notices shown below are graded according to the degree of danger.

⚠ DANGER

indicates that death or severe personal injury **will** result if proper precautions are not taken.

⚠ WARNING

indicates that death or severe personal injury **may** result if proper precautions are not taken.

⚠ CAUTION

indicates that minor personal injury can result if proper precautions are not taken.

NOTICE

indicates that property damage can result if proper precautions are not taken.

If more than one degree of danger is present, the warning notice representing the highest degree of danger will be used. A notice warning of injury to persons with a safety alert symbol may also include a warning relating to property damage.

Qualified Personnel

The product/system described in this documentation may be operated only by **personnel qualified** for the specific task in accordance with the relevant documentation, in particular its warning notices and safety instructions. Qualified personnel are those who, based on their training and experience, are capable of identifying risks and avoiding potential hazards when working with these products/systems.

Proper use of Siemens products

Note the following:

⚠ WARNING

Siemens products may only be used for the applications described in the catalog and in the relevant technical documentation. If products and components from other manufacturers are used, these must be recommended or approved by Siemens. Proper transport, storage, installation, assembly, commissioning, operation and maintenance are required to ensure that the products operate safely and without any problems. The permissible ambient conditions must be complied with. The information in the relevant documentation must be observed.

Trademarks

All names identified by ® are registered trademarks of Siemens AG. The remaining trademarks in this publication may be trademarks whose use by third parties for their own purposes could violate the rights of the owner.

Disclaimer of Liability

We have reviewed the contents of this publication to ensure consistency with the hardware and software described. Since variance cannot be precluded entirely, we cannot guarantee full consistency. However, the information in this publication is reviewed regularly and any necessary corrections are included in subsequent editions.

Siemens AG
Digital Industries
Postfach 48 48
90026 NÜRNBERG
GERMANY

A5E37478314-AT
Ⓟ 12/2021 Subject to change

Copyright © Siemens AG 2021.
All rights reserved

Connection of PA field devices to PROFINET IO

To connect PA field devices to PROFINET IO, use the SIMATIC CFU PA instead of the DP/PA link. You can find information on this in the commissioning manual: SIMATIC Distributed I/O SIMATIC Compact Field Unit (CFU) (https://support.industry.siemens.com/cs/ww/en/view/109776629)

Range of validity of these operating instructions

These operating instructions apply to the following products:

Table 2-1 Article numbers for the hardware components of the gateways

Component	Product	Article number
Interface module		
• IM 153-2OD	PROFIBUS DP interface module for extended temperature range	6ES7153-2BA70-0XB0
DP/PA coupler		
• FDC 157	DP/PA coupler	6ES7157-0AC85-0XA0
• FDC 157-0 Ex [ia]	DP/PA coupler Ex [ia]	6ES7157-0AD82-0XA0
Y-coupler		
• Y-coupler	Connects PROFIBUS DP redundant to PROFIBUS DP single (only possible in the Y-Link)	6ES7197-1LB00-0XA0
Bus modules		
• BM PS/IM	Bus module to accommodate one power supply PS and one interface module IM	6ES7195-7HA00-0XA0
• BM PS/IM SIPLUS extreme	Bus module for extended ambient conditions to accommodate one power supply PS and one interface module IM	6AG1195-7HA00-2XA0
• BM IM/IM	Bus module to accommodate two interface modules IM	6ES7195-7HD10-0XA0
• BM IM/IM Outdoor	Bus module for extended ambient conditions to accommodate two interface modules IM	6ES7195-7HD80-0XA0
• BM FDC	Bus module to accommodate one DP/PA coupler	6ES7195-7HF80-0XA0
• BM FDC/FDC (redundant)	Bus module to accommodate two DP/PA couplers (redundant)	6ES7195-7HG80-0XA0
• BM Y-coupler	Bus module to accommodate one Y-coupler	6ES7654-7HY00-0XA0
Active field distributors		
• AFDiSD (**A**ctive **F**ield **D**istributor **I**ntrinsic **S**afety with extended Fieldbus **D**iagnostic)	Active field distributor with extended fieldbus diagnostics for up to 6 PA field devices	6ES7655-5DX60-1BB0
• AFD4	Active field distributor for up to 4 PA field devices	6ES7157-0AG81-0XA0
• AFD4 (FM)	Active field distributor with FM approval for up to 4 PA field devices	6ES7655-5DX40-1AA1
• AFD4 Railmount	Active field distributor for up to 4 PA field devices, installation in enclosure required	6ES7655-5DX40-2AA0
• AFD8	Active field distributor for up to 8 PA field devices	6ES7157-0AG82-0XA0

For information on current components, the required software, and compatibility with predecessor components, refer to the section:

Compatibility overview (Page 275)

Mounting

5

5.1 Mounting rules

Follow the PNO PROFIBUS mounting guideline:

PROFIBUS User Organization (https://www.profibus.com/downloads)

Mounting position

The following modules can be installed vertically or horizontally:

- PROFIBUS DP interface module IM 153-2OD
- DP/PA coupler
- Y-coupler

WARNING

Open equipment

The devices are open equipment. This means that they may only be mounted in enclosures, cabinets, or electrical service rooms that can only be accessed by using a key or a tool. Only authorized personnel may have access to the enclosures, cabinets or electrical service rooms.

Mounting system

The modules are mounted on rails for the S7 assembly system. Free space of 40 mm must be maintained above and below the modules for trouble-free mounting.

You can find additional information on the setup and mounting in the operating instructions SIMATIC ET 200M Distributed I/O Device (https://support.industry.siemens.com/cs/ww/en/view/1142798).

Installation location

The DP/PA coupler (FDC 157-0 and FDC 157 Ex [ia]) or the DP/PA link with DP/PA coupler Ex [ia] can be operated in Zone 2 hazardous areas if they are installed in a suitable enclosure.

When using the DP/PA coupler Ex [ia], the PROFIBUS PA bus line may lead from the safe area to an area with Zone 0 / 20.

⚠ DANGER

Approval

For the DP/PA coupler FDC 157 Ex [ia] 6ES7157-0AD82-0XA0, the intrinsically safe PROFIBUS PA is approved for the following intrinsically safe electrical equipment:

- Equipment category 1G, 2G and 3G for Zones 0, 1, and 2
- Equipment category 1D, 2D and 3D for Zone 20, 21 and 22

You may use the DP/PA coupler FDC 157 Ex [ia] as a PROFIBUS node in equipment category 3G in the Zone 2 hazardous area (or in the safe area).

If you want to use the DP/PA coupler FDC 157 Ex [ia] in Zone 22, you must mount it in an approved enclosure certified for these zones.

Enclosure for Zone 2

The DP/PA coupler FDC 157 Ex [ia] or the DP/PA link with DP/PA coupler FDC 157 Ex [ia] must be mounted in a enclosure with at least IP 54 degree of protection. A manufacturer's declaration for Zone 2 must be submitted for the enclosure (in accordance with EN 60079-0).

Use the following cable glands:

- Power supply and PROFIBUS DP Ex i: Cable gland with manufacturer's declaration for Zone 2
- PROFIBUS PA Ex i: Degree of protection Ex i

⚠ DANGER

Explosion hazard

Sparks capable of ignition or impermissible surface temperatures may possibly form during installation work.

Never install under explosive conditions!

Switch off the voltage supply to the plant and adhere to the safety regulations.

5.2 Mounting the DP/PA coupler

5.2.1 Mounting DP/PA coupler for non-redundant mode

Required components

- Rail for the S7 mounting system
- DP/PA coupler

Installing a DP/PA coupler

Note

If you operate several DP/PA couplers in a rack in stand-alone operation without ring redundancy, you are not allowed to connect the DP/PA couplers via bus connectors or bus modules.

1. Hang the DP/PA coupler on the S7 rail and swing it down.
2. Screw down the DP/PA coupler.

Removing a DP/PA coupler

To remove the DP/PA coupler, proceed in the reverse order.

If the device is already in operation, switch off the power supply prior to removing it.

5.2.2 Mounting the DP/PA coupler for redundancy mode

Installation with bus modules

For operation with ring redundancy, connect two DP/PA couplers FDC 157-0 to a coupler pair.

Required components

- Rail for installation with active bus modules ("Rail for module replacement in runtime")
- For ring redundancy:
  - Bus module BM FDC/FDC (redundant)
    If the setup consists only of the coupler pair, the DP/PA coupler can be coupled via bus connectors.
  - Two FDC 157-0 DP/PA couplers (a maximum of one coupler pair is possible in an setup)

Installing bus modules and modules

1. Hang the *BM FDC* bus modules first, then the *BM FDC/FDC (redundant)* bus module on the mounting rail and press them into the rail.
2. Slide the bus modules together, so that the module connections have contact.
3. Insert the DP/PA couplers into the bus modules. Use the guides on the side of the bus modules for this.
4. Screw down the modules. This also fixes the bus modules to the rail.

Removing bus modules and modules

To remove the DP/PA coupler, proceed in the reverse order.

If the device is already in operation, switch off the power supply prior to removing it.

5.2.3 Setting addresses and redundancy mode

Introduction

You activate the diagnostic functions of the DP/PA coupler FDC 157-0 via the PROFIBUS address.

You activate the "Ring redundancy" mode at the DP/PA coupler pair and in the configuration.

Rules for operation as a visible device on PROFIBUS DP

- Permitted PROFIBUS addresses: 1 to 123.
  The addresses 124 and 125 are reserved for internal services.
- Each PROFIBUS address may only be assigned once in the DP master system.
- The PROFIBUS addresses of both DP/PA couplers must be different.
- The PROFIBUS addresses that are set at the DP/PA coupler and in the configuration software must be identical.
- The redundancy mode that is set at the DP/PA coupler pair and in the configuration software must match.
- For ring redundancy, a lower PA address must be set for the left FDC 157 ("Coupler 1") than for the right FDC 157 ("Coupler 2").

Required tools

Screwdriver 3 mm blade width

Setting the PROFIBUS address and redundancy mode

1. Open the front door of the DP/PA coupler.
2. Use a screwdriver to set the required PROFIBUS address via the DIP switches. The PROFIBUS address is the sum of the values of all of switches that are in the "ON" position (switch set to the right).
3. Set the redundancy mode to ring redundancy using the DIP switch.
4. Close the front door of the DP/PA coupler.

Figure	Switch function	
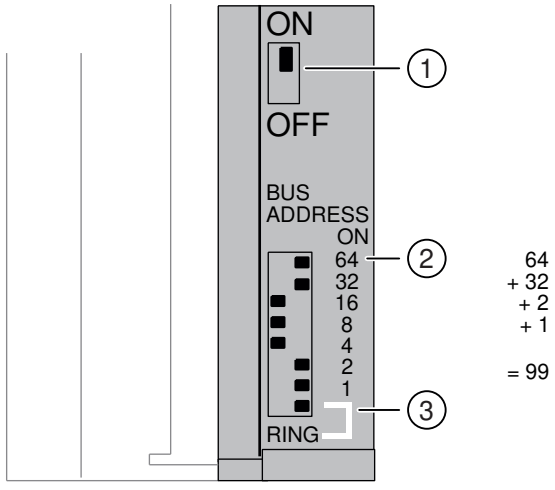	①	PA bus termination switch • ON: Bus terminating resistor switched on (default setting) • OFF: Bus terminating resistor switched off
	②	Set the PROFIBUS address.
	③	Redundancy mode • **ON: Ring redundancy** • OFF: Coupler redundancy (**default setting**)

Changing the PROFIBUS address

You can change the PROFIBUS address setting at any time. However, the DP/PA coupler does not apply the new setting until the 24 VDC supply has been switched off / on.

5.2.4 Removing and inserting DP/PA couplers

Introduction

Removing and inserting a DP/PA coupler during operation with ring redundancy is possible. The PA field devices connected to the redundant coupler pair remain in operation.

⚠ **WARNING**
Explosion hazard Ensure that there are no explosive conditions in the area of the DP/PA coupler.

Requirement

To remove a DP/PA coupler during operation, the following requirements must be fulfilled:

- The ACT LED of the DP/PA coupler must not be lit. Multiple PA field devices can fail otherwise.
- The power supply of the DP/PA coupler FDC 157-0 must be disconnected.

Removing and inserting modules

Note

Removing a DP/PA coupler

Removing a DP/PA coupler is only allowed in the de-energized state.

Disconnect the power supply of a DP/PA coupler before removing it.

Note

Failure of a DP/PA coupler FDC 157-0

If you remove a DP/PA coupler FDC 157-0 under voltage, the overvoltage protection may respond permanently. You can reset this shutdown by switching off the supply system for at least 10 s.

Before removing a DP/PA coupler FDC 157-0, disconnect its power supply.

5.3 Mounting the DP/PA link

5.3.1 Mounting the DP/PA link for non-redundant mode

Required components

- Rail for the S7 mounting system
- PROFIBUS DP interface module (IM 153-2OD)
- 1 to 5 DP/PA couplers
- Bus module BM PS/IM or BM IM/IM
- Bus modules BM FDC

If the module exchange is not required during operation, the DP/PA couplers can be coupled via one bus connector each.
A bus connector is included in the delivery of the DP/PA coupler.

Typical installation of the DP/PA link

The following figure shows the typical installation of the DP/PA link with two DP/PA couplers and PS 307 power supply with open front doors.

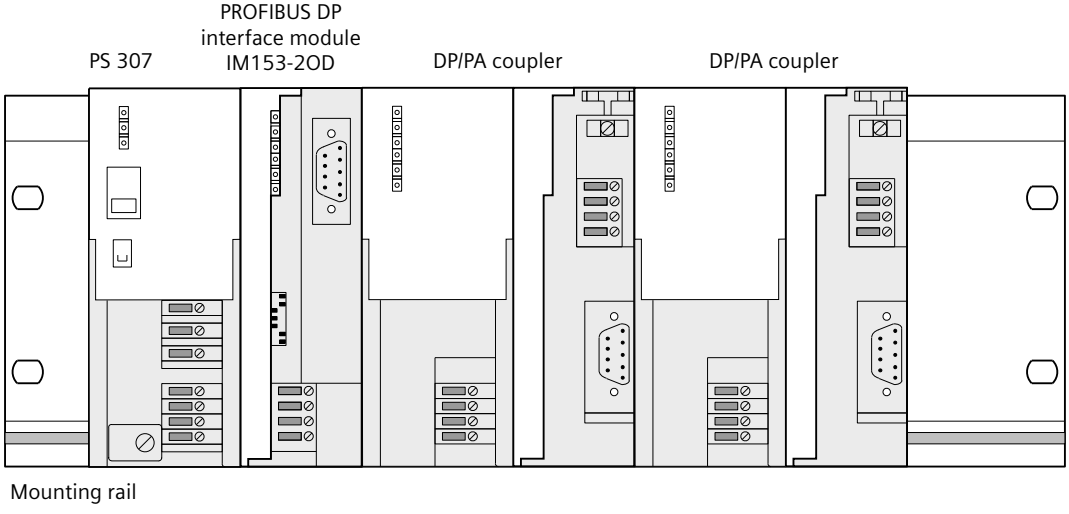

Figure 5-1 Typical installation of the DP/PA link for non-redundant mode

Installing the DP/PA link

Note

Changing a configuration

If the DP/PA link is already in operation, switch off the power supply before changing the configuration.

1. Hang the BM PS/IM or BM IM/IM bus module with the lower edge onto the S7 mounting rail, press it into the S7 mounting rail and slide it into the desired position.
   With the recommended mounting rails, this is to the left up to the engagement position.
2. Hang the next bus module (BM FDC) onto the mounting rail and press it into the mounting rail. Slide it against the left bus module so that the module connection makes contact.
3. Hang the modules onto the mounting rail and swivel them down. Use the guides on the side of the bus modules for this. When screwing the modules tight, fasten the bus module to the mounting rail at the same time.
4. Plug the bus module cover onto the last bus module. If no module is plugged into a slot, plug the backplane bus cover into the unoccupied slot as well.

Note

Mounting with bus connectors

Before mounting a DP/PA coupler and the module to be mounted on the left (starting with the PROFIBUS DP interface module), observe the following:
(does not apply when mounting the last DP/PA coupler)

1. Plug in a bus connector to the right of the module to be mounted on the left.
2. Only then hang the module to be mounted on the left onto the S7 mounting rail and swivel the modules down.

Removing / inserting a DP/PA coupler

If you want to pull or plug DP/PA couplers during operation, the DP/PA link must be assembled with bus modules.

Removing a DP/PA link

If the DP/PA link is already in operation, switch off the power supplies before disassembly.

To disassemble the DP/PA link with bus connectors, proceed in reverse order. Start with the DP/PA coupler mounted to the far right.

See also

Accessories for PROFIBUS DP (Page 289)

Accessories for PROFIBUS PA (Page 290)

Checking mechanical ambient conditions

The following table provides information on the type and scope of checks regarding mechanical ambient conditions.

Table 12-8 Checking Mechanical Environmental Conditions

Checking for	Test standard	Comments
Vibrations	Vibration test in compliance with IEC 60068 Part 2-6 Part (sine)	Type of vibration: Frequency sweeps with a sweep rate of 1 octave/ minute. 5 Hz ≤ f ≤ 9 Hz, constant amplitude 3.5 mm 9 Hz ≤ f ≤ 150 Hz, constant acceleration 1*g* Period of oscillation: 10 frequency sweeps per axis in each of the 3 axis which are vertical to each other.
Shock	Shock test in accordance with IEC 60068 Part 2-29	Type of shock: half-sine Strength of shock: 15*g* peak value, 11 ms duration Shock direction: 3 shocks each in +/- direction in each of the 3 axes that are vertical to each other

Climatic environmental conditions

The described components can be used in the following climatic ambient conditions:

Table 12-9 Temperature: Horizontal mounting Vertical mounting

Permissible range	Comments	Article number
• From 0 °C to 60 °C (horizontal mounting position) • From 0 °C to 40 °C (vertical mounting position)	IM 153-2 OD [1)]	6ES7153-2BA70-0XB0
	Y-coupler	6ES7197-1LB00-0XA0
	Bus module BM IM/IM	6ES7195-7HD10-0XA0
	Bus module BM Y-coupler	6ES7654-7HY00-0XA0
• From -25 °C to 60 °C (horizontal mounting position) • From -25 °C to 40 °C (vertical mounting position)	IM 153-2 OD	6ES7153-2BA70-0XB0
	DP/PA coupler FDC157-0	6ES7157-0AC85-0XA0
	DP/PA coupler Ex [ia]	6ES7157-0AD82-0XA0
	Bus module BM IM/IM	6ES7195-7HD80-0XA0
	Bus module BM FDC	6ES7195-7HF80-0XA0
	Bus module BM FDC/FDC (redundant)	6ES7195-7HG80-0XA0

[1)] The temperature range applies to the combination of components.

Table 12-10 Temperature: Any type of installation

Permissible range	Comments	Article number
• From -25 °C to 70 °C	• Active field distributor AFD4 • Active field distributor AFD4 Railmount • Active field distributor AFD8	
• From -40 °C to 70 °C	• Active field distributor AFD4 Railmount • Active field distributor AFD4 FM • Active field distributor AFD4 • Active field distributor AFD8 • Active field distributor AFDiSD	

Table 12-11 Relative humidity

Permissible range	Comments [1)]	Article number
From 10 % to 95 %	With condensation: • Active field distributor AFD4 FM • Active field distributor AFD4 • Active field distributor AFD8 • Active field distributor AFDiSD	

1) Without condensation, corresponds to relative humidity (RH) pollution degree 2 according to IEC 61131 Part 2

Table 12-12 Atmospheric pressure

Permissible range	Comments	Article number
from 1080 to 795 MHz	corresponds to a height of -1000 to 2000 m	

Table 12-13 Contaminant concentration

Permissible range	Comments	Article number
• SO_2: < 0.5 ppm; • RH < 60 %, no condensation • H_2S: < 0.1 ppm; • RH < 60 %, no condensation	• Test: 10 ppm; 4 days • Test: 1 ppm; 4 days	

12.1.13 Specifications for insulation tests, protection class and degree of protection

Test voltages

The insulation stability is tested with the following voltages during product testing:

Table 12-14 Test voltages

Circuits with a rated voltage of U_e relative to other circuits or ground	Test voltage
0 V < U_e ≤ 50 V	DC 600 V, 1 s

Protection class

Protection class I in compliance with IEC 61140; this means that a grounding terminal to the rail is required!

Protection against foreign bodies and water

Degree of protection IP 20 according to IEC 60529; that is protection against contact with standard probes.

There is no protection from penetration by water.

12.1.14 Rated voltage

Rated voltage for operation

The described components work with a rated voltage of 24 V DC.
The tolerance range extends from 20.4 V DC to 28.8 V DC.

Exception: active field distributors AFD4 / AFD4 (FM) / AFD4 Railmount / AFD8 / AFDiSD:

The active field distributors operate from a nominal voltage of 16 V DC.
The tolerance range extends from 16 to 32 V DC.

A.3 Article numbers

A.3.1 Components

Components

Table A-4 Article numbers for the hardware components of the gateways

Hardware components	Product	Article number	Outdoor use
Interface module			
• IM 153-2OD	PROFIBUS DP interface module for extended temperature range supports the "Extended fieldbus diagnostics (EFD)" function	6ES7153-2BA70-0XB0	YES
DP/PA couplers			
• FDC 157	DP/PA couplers	6ES7157-0AC85-0XA0	YES
• FDC 157-Ex [ia]	DP/PA coupler Ex	6ES7157-0AD82-0XA0	YES
Y-coupler			
• Y-coupler	Via DP redundant after DP single)	6ES7197-1LB00-0XA0	No
Bus modules			
• BM PS/IM	Bus module to accommodate one PS power supply and one PROFIBUS DP interface module.	6ES7195-7HA00-0XA0	No
• BM PS/IM SIPLUS extreme	Bus module for extended ambient conditions to accommodate one PS power supply and one PROFIBUS DP interface module.	6AG1195-7HA00-2XA0	YES
• BM IM/IM	Bus module to accommodate two PROFIBUS DP interface modules	6ES7195-7HD10-0XA0	No
• BM IM/IM Outdoor	Bus module for extended ambient conditions to accommodate two PROFIBUS DP interface modules	6ES7195-7HD80-0XA0	YES
• BM FDC	Bus module to accommodate one DP/PA coupler	6ES7195-7HF80-0XA0	YES
• BM FDC/FDC (redundant)	Bus module to accommodate two DP/PA couplers (redundant)	6ES7195-7HG80-0XA0	YES
• BM Y-coupler	Bus module to accommodate one Y-coupler	6ES7654-7HY00-0XA0	No
Active field distributor			
• AFDiSD (**A**ctive **F**ield **D**istributor **i**ntrinsic **S**afety with extended Fieldbus-**D**iagnostic)	Active field distributor with extended fieldbus diagnostics for up to 6 PA field devices	6ES7655-5DX60-1BB0	YES
• AFD4	Active field distributor for up to 4 PA field devices	6ES7157-0AG81-0XA0	YES
• AFD4 (FM)	Active field distributor with FM approval for up to 4 PA field devices	6ES7655-5DX40-1AA1	YES

Hardware components	Product	Article number	Outdoor use
• AFD4 Railmount	Active field distributor for up to 4 PA field devices, installation in enclosure required	6ES7655-5DX40-2AA0	No
• AFD8	Active field distributor for up to 8 PA field devices	6ES7157-0AG82-0XA0	YES

Table A-5 Article numbers: DP/PA link without bus modules and power supply

Installation note	Product	Article number	Outdoor use [1]
Connection of couplers via bus connector	1 x IM 153-2OD	• 6ES7153-2BA70-0XB0	YES
	• FDC 157 or • FDC 157-Ex [ia]	• 6ES7157-0AC85-0XA0 or • 6ES7157-0AD82-0XA0	

Table A-6 Article numbers: DP/PA link with bus modules and power supply

Installation note	Product	Article number	Outdoor use [1]
Max. 5 DP/PA couplers - take into consideration the required number of bus modules BM FDC, etc.	• 1 x IM 153-2OD	• 6ES7153-2BA70-0XB0	-
	• 1 x power supply PS 307	• 6ES7307-1...	No
	• 1 x bus module PS/IM	• 6ES7195-7HA00-0XA0	-
	• FDC 157	• 6ES7157-0AC85-0XA0	-
	• BM FDC or • BM FDC/FDC (redundant)	• 6ES7195-7HF80-0XA0 or • 6ES7195-7HG80-0XA0	- -

[1] Only the component that enables (YES) or prevents (No) outdoor use is marked for the installation variant.

Table A-7 Article numbers: DP/PA link with bus modules without power supply

Installation note	Product	Article number	Outdoor use [1]
Max. 5 DP/PA coupler - take into consideration the required number of bus modules BM FDC, etc.)	• 1 x IM 153-2OD	• 6ES7153-2BA70-0XB0	-
	• 1 x bus module PS/IM (or BM PS/IM SIPLUS extreme)	• 6ES7195-7HA00-0XA0 • 6AG1195-7HA00-2XA0	• No • YES
	• FDC 157 or • FDC 157-Ex [ia]	• 6ES7157-0AC85-0XA0 or • 6ES7157-0AD82-0XA0	- -
	• BM FDC or • BM FDC/FDC (redundant)	• 6ES7195-7HF80-0XA0 or • 6ES7195-7HG80-0XA0	- -

[1] Only the component that enables (YES) or prevents (No) outdoor use is marked for the installation variant.

Table A-8 Article numbers: Redundant DP/PA link

Installation variant	Product	Article number	Outdoor use [1]
Redundant DP/PA link (Max. 5 DP/PA coupler - take into consideration the required number of bus modules BM FDC, etc.)	• 2 x IM 153-2OD	• 6ES7153-2BA70-0XB0	-
	• 1 x BM IM/IM (or BM IM/IM Outdoor)	• 6ES7195-7HD10-0XA0 • 6ES7195-7HD80-0XA0	• No • YES
	• FDC 157 or • FDC 157-Ex [ia]	• 6ES7157-0AC85-0XA0 or • 6ES7157-0AD82-0XA0	- -
	• BM FDC or • BM FDC/FDC (redundant)	• 6ES7195-7HF80-0XA0 or • 6ES7195-7HG80-0XA0	- -

[1] Only the component that enables (YES) or prevents (No) outdoor use is marked for the installation variant.

Table A-9 Article numbers for Y-link

Hardware components	Products		Article number	Outdoor use
Complete package Y-link: • 2 x PROFIBUS DP interface module IM 153-2OD • 1 x bus module BM IM/IM • 1 x Y-coupler • 1 x bus module BM Y-coupler	Complete package for installation of a Y-link consisting of the following products:		6ES7197-1LA12-0XA0	No
	2 x IM 153-2OD	6ES7153-2BA70-0XB0		
	1 x BM IM/IM	6ES7195-7HD80-0XA0		
	1 x Y-coupler	6ES7197-1LB00-0XA0		
	1 x BM Y-coupler	6ES7654-7HY00-0XA0		

Table A-10 Article numbers for accessories for installation

Component	Article number
Mounting rail for the "Module replacement in runtime" function • 482.6 mm • 530 mm • 620 mm • 2000 mm	 6ES7195-1GA00-0XA0 6ES7195-1GF30-0XA0 6ES7195-1GG30-0XA0 6ES7195-1GC00-0XA0
Bus connector for S7 mounting rail (included with each DP/PA coupler)	6ES7390-0AA00-0AA0
Covers (included are 4 backplane bus covers and 1 bus module cover)	6ES7195-1JA00-0XA0
Sealing plugs for unused connections on the AF-DiSD (10 pieces)	6ES7157-0AG80-1XA1