MANUFACTURER DOCUMENT PACKAGE

Manufacturer's Manual

Selected official pages for procurement and maintenance review

PRODUCT BRAND

Siemens

PRODUCT MODEL

6ES7231-4HA30-0XB0

Single-channel analog input board. Relevant section pages: 1323, 1324. Adjacent model text on shared pages is outside this product reference.

OFFICIAL SOURCE

S7-1200 Programmable Controller System Manual; V4.5 05/2021

Siemens original documentation and product reference

Technical and terminal-reference excerpt, not a complete installation guide. See the linked Siemens V4.5 manual for installation, scaling and safety context.

AMIKON PRODUCT SUPPORT

+86-18020776786 INFO@AMIKON.CN

AMIKONG.COM

Amikon Limited prepared this independent reference package. Selected manufacturer pages follow with their original content and pagination visible.

Table A-210 General specifications

Technical data	SB 1231 AI 1 x 12 bit
Article number	6ES7231-4HA30-0XB0
Dimensions W x H x D (mm)	38 x 62 x 21
Weight	35 grams
Power dissipation	0.4 W
Current consumption (SM Bus)	55 mA
Current consumption (24 V DC)	none

Table A-211 Analog inputs

Technical data	SB 1231 AI 1x12 bit
Number of inputs	1
Type	Voltage or current (differential)
Range	±10 V, ±5 V, ±2.5 or 0 to 20 mA
Resolution	11 bits + sign bit
Full scale range (data word)	-27648 to 27648
Over/Under range (data word)	Voltage: 32511 to 27649 / -27649 to -32512 Current: 32511 to 27649 / 0 to -4864 (Refer to Analog input representation for voltage and Analog input representation for current (Page 1327).)
Overflow/Underflow (data word)	Voltage: 32767 to 32512 / -32513 to -32768 Current: 32767 to 32512 / -4865 to -32768 (Refer to Analog input representation for voltage and Analog input representation for current (Page 1327).)
Maximum withstand voltage / current	±35 V / ±40 mA
Smoothing	None, weak, medium, or strong (refer to Analog input response times for step response time (Page 1326).)
Noise rejection	400, 60, 50, or 10 Hz (refer to Analog input response times for sample rates (Page 1327).)
Accuracy (25 °C / -20 to 60 °C)	±0.3% / ±0.6% of full scale
Input impedance	Voltage: 150 kΩ; Current: 250 Ω
Measuring principle	Actual value conversion
Common mode rejection	40 dB, DC to 60 Hz
Operational signal range	Signal plus common mode voltage must be less than +35 V and greater than -35 V
Isolation (field side to logic)	None
Cable length (meters)	100 m, twisted and shielded

Table A-212 Diagnostics

Technical data	SB 1231 AI 1 x 12 bit
Overflow/underflow	Yes
24 V DC low voltage	no

SB 1231 wiring current transducers

Wiring current transducers are available as 2-wire transducers and 4-wire transducers as shown below.

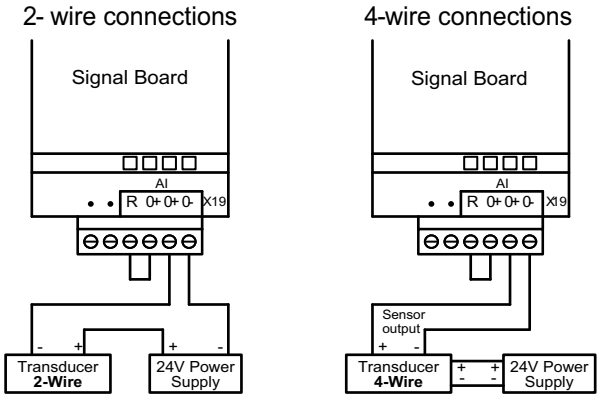

Table A-213 Wiring diagram for the analog input SB

SB 1231 AI x 12 bit (6ES7231-4HA30-0XB0)	
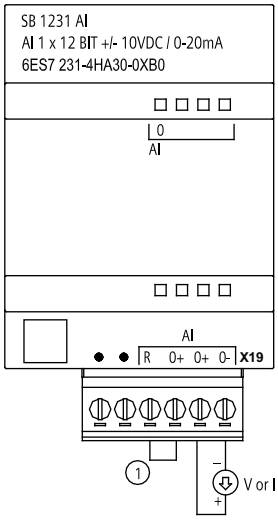	① Connect "R" and "0+" for electrical current. Note: Connectors must be gold. See Appendic C, Spare Parts for article number.

Table A-214 Connector pin locations for SB 1231 AI x 12 bit (6ES7231-4HA30-0XB0)

Pin	X19 (gold)
1	No connection
2	No connection
3	AI R
4	AI 0+
5	AI 0+
6	AI 0-