MANUFACTURER DOCUMENT PACKAGE

Manufacturer's Manual

Amikon cover with selected official ABB pages

S800 I/O

AO845 3BSE023676R1

ANALOG OUTPUT MODULE

OFFICIAL SOURCES

ABB official product documentation. Selected pages retain their original content, color and aspect ratio.

AO845/AO845A Analog Output Module, Single or Redundant

Features

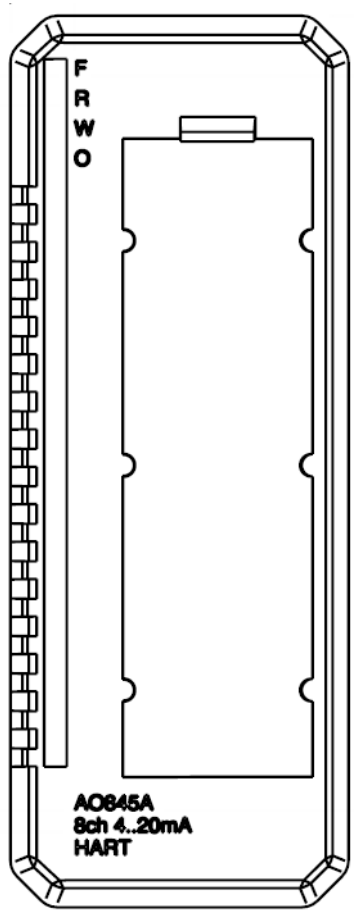

- 8 channels of 4...20 mA outputs.
- For single or redundant applications.
- OSP sets outputs to predetermined state upon error detection.
- 1 group of 8 channels isolated from ground.
- Analog Output is to be short circuit secured to ZP or +24 V.
- Advanced on-board diagnostics.
- 12 bit resolution.
- HART pass-through communication.

Description

The AO845/AO845A Analog Output Module for single or redundant applications has 8 unipolar analog output channels.

The module performs self-diagnostic cyclically. Module diagnostics include:

- External Channel Error is reported (only reported on active channels) if the process power supply that supply voltage to output circuitry is too low, or the output current is less than the output set value and the output set value > 1 mA (open circuit).
- Internal Channel Error is reported if the output circuit can not give the right current value. In a redundant pair the module will be commanded to error state by the ModuleBus master.

- Module Error is reported in case of Output Transistor Error, Short Circuit, Checksum Error, Internal Power Supply Error, Status Link Error, Watchdog or Wrong OSP behavior.

The module has HART pass-through functionality. Only point to point communication is supported. The output filter must be enabled on channels used for HART communication.

Five different types of MTUs can be used for single applications. The TU830/ TU833 Extended MTU and the TU810 (or TU814) Compact MTU enables wire connection to the devices without additional terminals. The TU812 Compact MTU has a D-Sub 25 pin (male) connector for connection to the process.

For redundant applications there are three types of MTUs, TU842/TU852 for mounting on a horizontal DIN rail and TU843 for mounting on a vertical DIN rail.

Shielded field cables for process connections are required if HART is used.

Technical Data

Table 41. AO845/AO845A Analog Output Module Specifications at 25°C

Feature	AO845/AO845A Analog Output Module
Number of channels	8
Output range	4...20 mA
Over range	±15%
Output load	Max 750 ohms
Maximum field cable length	600 meters (656 yd.)
Rise time output filter - disable - enable	 23 ms (0-90%) max 4 mA / 12.5 ms
Cycle time	10 ms
Error	Max. 0.1%
Resolution	12 bit

Table 41. AO845/AO845A Analog Output Module Specifications at 25°C (Continued)

Feature	AO845/AO845A Analog Output Module
Output Set as Predetermined (OSP) timer	256, 512, 1024 ms
Temperature drift	Max. 50 ppm/° C
Current consumption 24 V (process power supply, UPx)	218 mA (max 20mA on 8 channels)
Current consumption 5 V (Modulebus)	125 mA (max)
Power dissipation (1)	3.5 W
Isolation	Groupwise isolated from ground
Mounting termination units	TU810, TU812, TU814, TU830, TU833, TU842, TU843 and TU852
MTU keying code	AO845: CC AO845A: DB
Rated insulation voltage	50 V
Dielectric test voltage	500 V a.c.

(1) 250 ohm load, 70% of nominal current, all channels activated.

Block Diagram AO845/AO845A

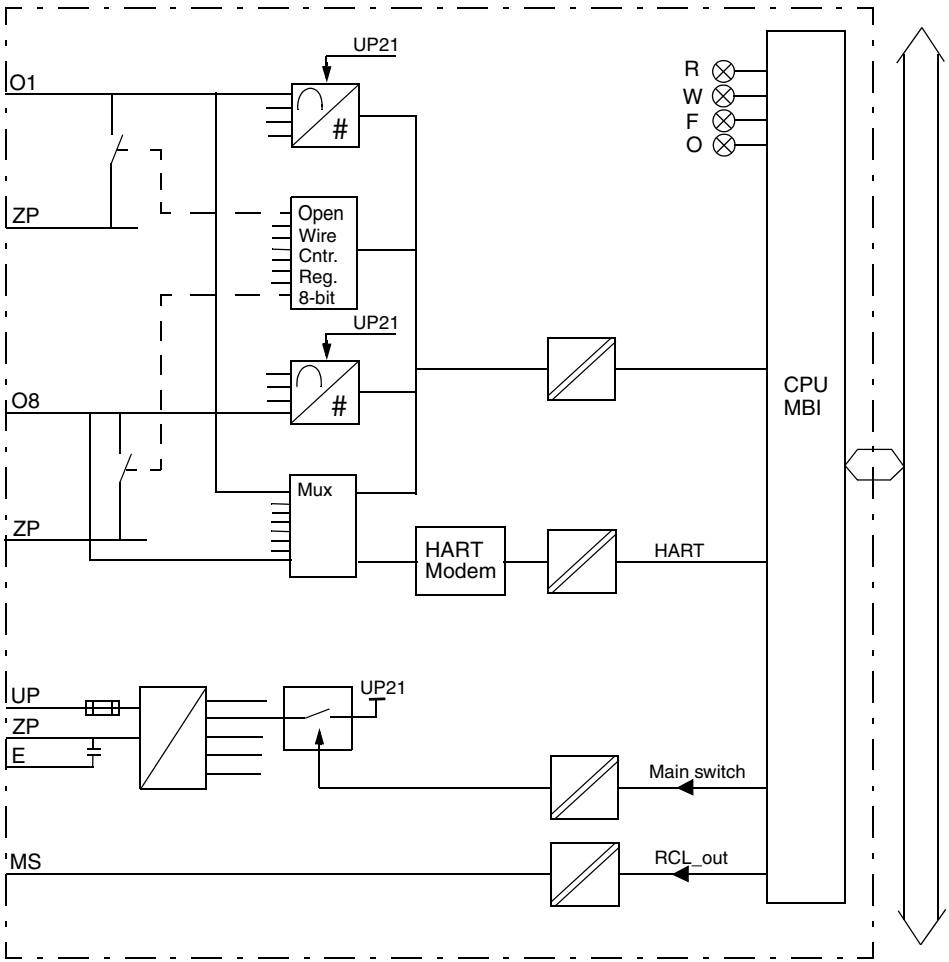

Figure 75. AO845/AO845A Block Diagram

Process Connections

With HART signals shielded cables should be used for current process connections.

Table 42. AO845/AO845A Process Connections

Process Connection	TU810 (or TU814) Terminal	TU812 DSub 25 male connector(1)	TU830/TU833 Terminal	TU842/TU843 Terminal	TU852 Terminal
+24 V d.c.	L1+ (2)	1, 14	L1+ (2)	L1+	1, 14 (X1a)
0 V d.c. (ZP)	L1-	2, 15	L1- (2)	L1-	2, 15 (X1a)
-	-	-	B1, B2	-	-
Ch1, + Output	C1	3	C1	C1, C2	3 (X1a)
Ch1 Return (ZP)	A1	-	A1, A2	A1, A2	-
-	-	-	B3, B4	-	-
Ch 2, + Output	C2	4	C3	C3, C4	4 (X1a)
Ch2 Return (ZP)	A2	-	A3, A4	A3, A4	-
-	-	-	B5, B6	-	-
Ch 3, + Output	C3	5	C5	C5, C6	5 (X1a)
Ch3 Return (ZP)	A3	-	A5, A6	A5, A6	-
-	-	-	B7, B8	-	-
Ch 4, + Output	C4	6	C7	C7, C8	6 (X1a)
Ch4 Return (ZP)	A4	-	A7, A8	A7,A8	-
-	-	-	B9, B10	-	-
Ch 5, + Output	C5	7	C9	C9, C10	7 (X1a)
Ch5 Return (ZP)	A5	-	A9, A10	A9, A10-	-
-	-	-	B11, B12	-	-
Ch 6, + Output	C6	8	C11	C11, C12	8 (X1a)

Table 42. AO845/AO845A Process Connections (Continued)

Process Connection	TU810 (or TU814) Terminal	TU812 DSub 25 male connector(1)	TU830/TU833 Terminal	TU842/TU843 Terminal	TU852 Terminal
Ch6 Return (ZP)	A6	-	A11, A12	A11, A12	-
-	-	-	B13, B14	-	-
Ch 7, + Output	C7	9	C13	C13, C14	9 (X1a)
Ch7 Return (ZP)	A7	-	A13, A14	A13, A14	-
-	-	-	B15, B16	-	-
Ch 8, + Output	C8	10	C15	C15, C16	10 (X1a)
Ch8 Return (ZP)	A8	-	A15, A16	A15, A16	-
0 V dc (ZP)	L2-	12, 25	L2- (2)	L2-	12, 25 (X1a)

(1) Pin 13 connected to connector body for EM.

Figure 76 shows the process connections for the AO845/AO845A when installed on a TU830 Extended MTU.

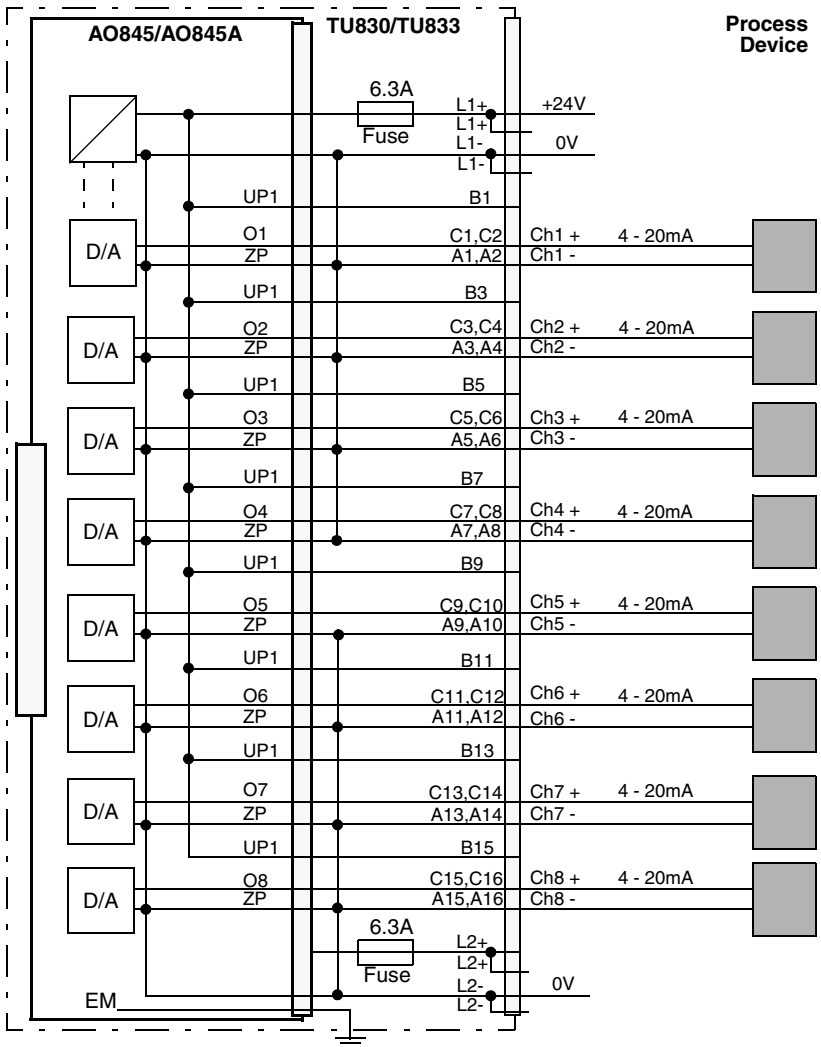

Figure 76. AO845/AO845A with TU830 Extended MTU Process Connections

Figure 77 shows the process connections for the AO845/AO845A when installed on a TU810 or TU814 Compact MTU.

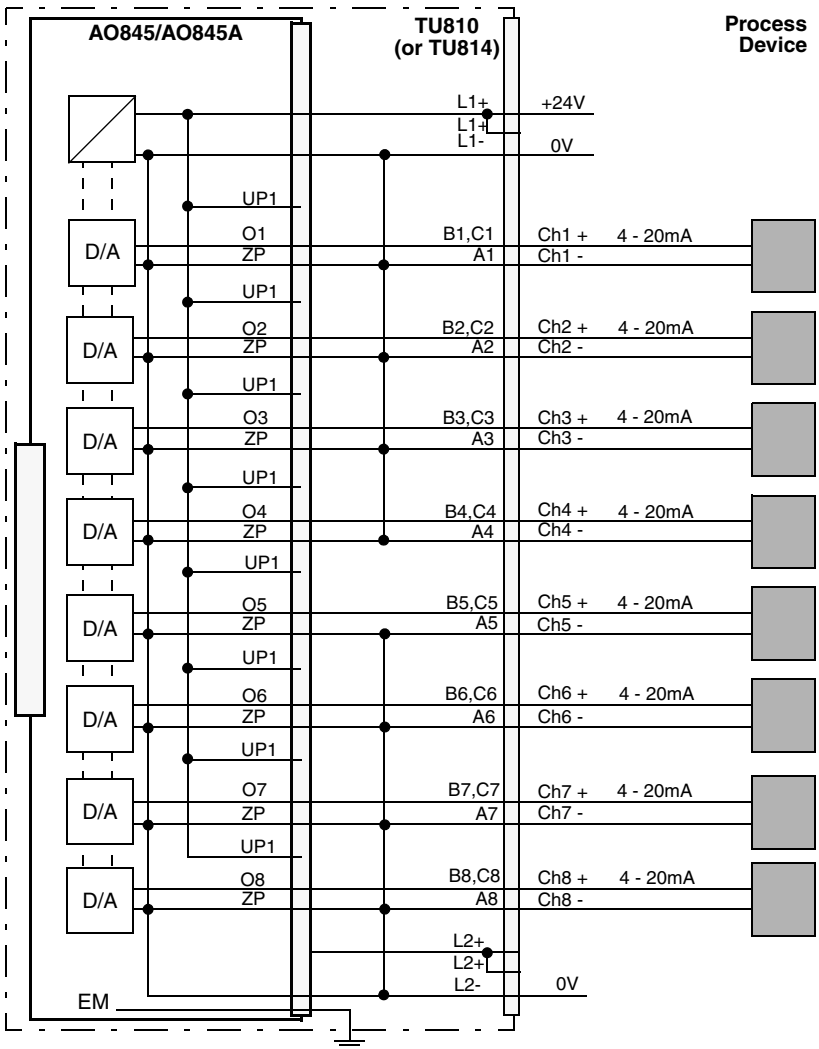

Figure 77. AO845/AO845A with TU810 or TU814 Compact MTU Process Connections

Figure 78 shows the process connections for the AO845/AO845A when installed on a TU812 Compact MTU.

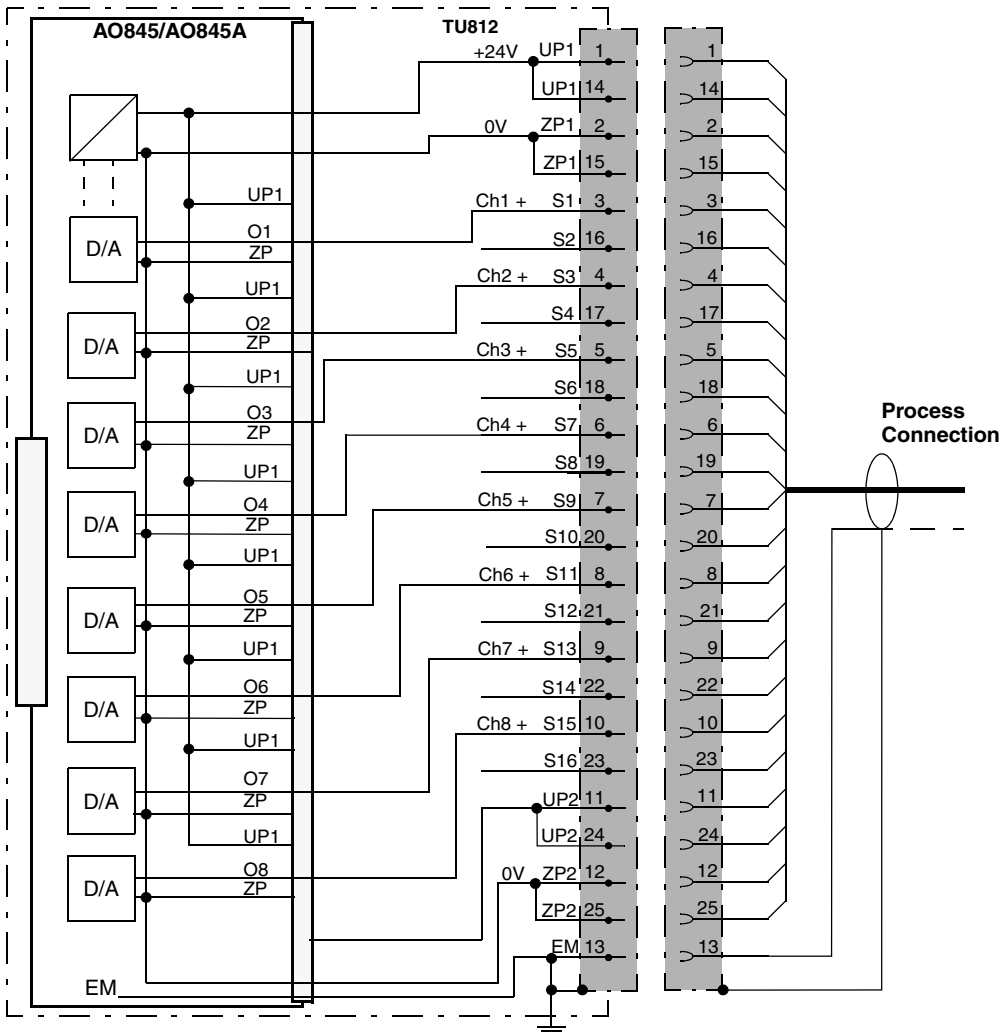

Figure 78. AO845/AO845A with TU812 Compact MTU Process Connections

Figure 79 shows the process connections for the AO845/AO845A when installed on a TU842 or TU843 Redundant MTU.

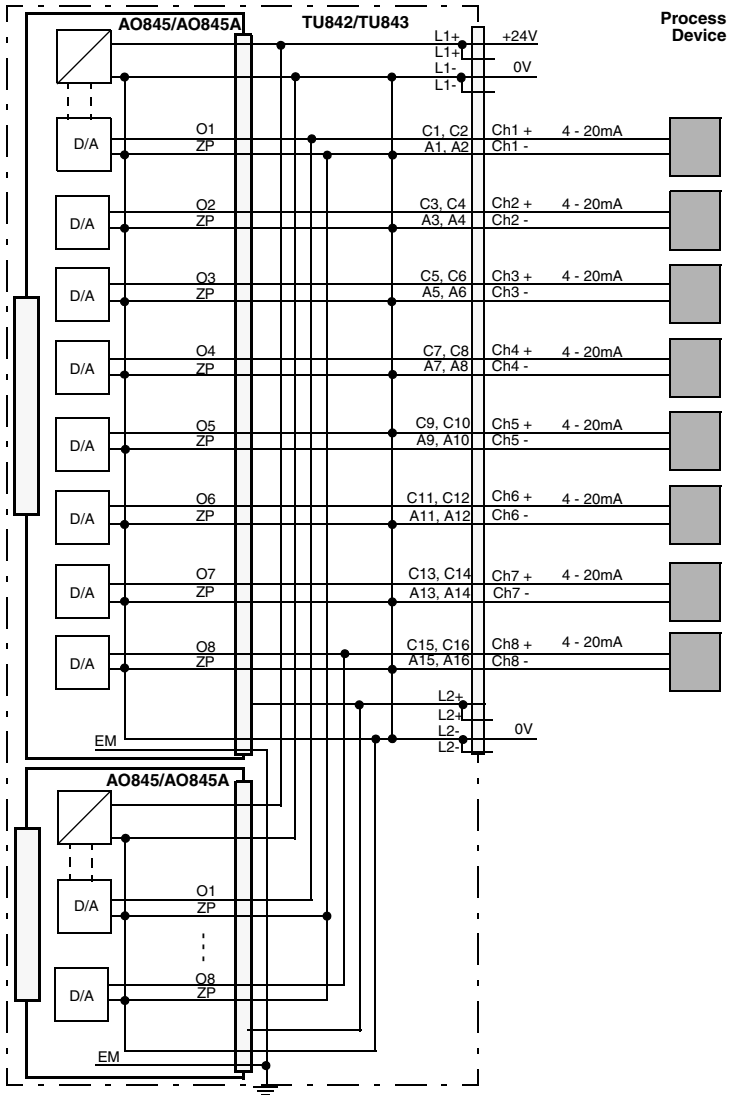

Figure 79. AO845/AO845A with TU842 or TU843 Redundant MTU Process Connections