MANUFACTURER DOCUMENT PACKAGE

Manufacturer's Manual

Amikon cover with selected ABB PIN-48 reference pages; not the complete installation manual

DCS800 Power Interface / 3BSE004939R0002

SDCS-PIN-48

THYRISTOR PULSE TRANSFORMER BOARD

OFFICIAL SOURCES

ABB 3ADW000194R0701 Rev G. Original publisher, safety and pulse-interface pages retained unchanged.

DCS800 Drives
20 to 5200 A

Hardware Manual

Code: 3ADW000194R0701 Rev G

Effective: 03.07.2013
Supersedes: Rev F 09.2008

© 2013 ABB Automation Products GmbH. All rights reserved.

Safety instructions

What this chapter contains

This chapter contains the safety instructions which you must follow when installing, operating and servicing the drive. If ignored, physical injury or death may follow, or damage may occur to the drive, the motor or driven equipment. Read the safety instructions before you work on the unit.

To which products this chapter applies

The information is valid for the whole range of the product DCS800, the converter modules DCS800-S0x size D1 to D7, field exciter units DCF80x, etc. like the Rebuild Kit DCS800-R00-9xxx.

Use of warnings and notes

There are two types of safety instructions throughout this manual: warnings and notes. Warnings caution you about conditions which can result in serious injury or death and/or damage to the equipment. They also tell you how to avoid the danger. Notes draw attention to a particular condition or fact, or give information on a subject. The warning symbols are used as follows:



Dangerous voltage warning warns of high voltage which can cause physical injury and/or damage to the equipment.



General danger warning warns about conditions, other than those caused by electricity, which can result in physical injury or death and/or damage to the equipment.



Electrostatic sensitive discharge warning warns of electrostatic discharge which can damage the equipment.

Installation and maintenance work

These warnings are intended for all who work on the drive, motor cable or motor. Ignoring the instructions can cause physical injury or death and/or damage to the equipment..



WARNING!

- **Only qualified electricians are allowed to install and maintain the drive!**
- Never work on the drive, motor cable or motor when main power is applied. Always ensure by measuring with a multimeter (impedance at least 1 Mohm) that:
    1. Voltage between drive input phases U1, V1 and W1 and the frame is close to 0 V.
    2. Voltage between terminals C+ and D- and the frame is close to 0 V.
- Do not work on the control cables when power is applied to the drive or to the external control circuits. Externally supplied control circuits may cause dangerous voltages inside the drive even when the main power on the drive is switched off.
- Do not make any insulation resistance or voltage withstand tests on the drive or drive modules.
- Isolate the motor cables from the drive when testing the insulation resistance or voltage withstand of the cables or the motor.
- When reconnecting the motor cable, always check that the C+ and D- cables are connected with the proper terminal.

Note:

- The motor cable terminals on the drive are at a dangerously high voltage when the main power is on, regardless of whether the motor is running or not.
- Depending on the external wiring, dangerous voltages (115 V, 220 V or 230 V) may be present on the relay outputs of the drive system (e.g. SDCS-IOB-2 and RDIO).
- DCS800 with enclosure extension: Before working on the drive, isolate the whole drive from the supply.

Grounding



These instructions are intended for all who are responsible for the grounding of the drive. Incorrect grounding can cause physical injury, death and/or equipment malfunction and increase electromagnetic interference.



WARNING!

- Ground the drive, motor and adjoining equipment to ensure personnel safety in all circumstances, and to reduce electromagnetic emission and pick-up.
- Make sure that grounding conductors are adequately sized and marked as required by safety regulations.
- In a multiple-drive installation, connect each drive separately to protective earth (PE ⏚).
- Minimize EMC emission and make a 360° high frequency grounding (e.g. conductive sleeves) of screened cable entries at the cabinet lead-through plate.
- Do not install a drive equipped with an EMC filter to an ungrounded power system or a high resistance-grounded (over 30 ohms) power system.

Note:

- Power cable shields are suitable as equipment grounding conductors only when adequately sized to meet safety regulations.
- As the normal leakage current of the drive is higher than 3.5 mA AC or 10 mA DC (stated by EN 50178, 5.2.11.1), a fixed protective earth connection is required.

Printed circuit boards and fiber optic cables

These instructions are intended for all who handle the circuit boards and fiber optic cables. Ignoring the following instructions can cause damage to the equipment.

WARNING! The printed circuit boards contain components sensitive to electrostatic discharge. Wear a grounding wrist band when handling the boards. Do not touch the boards unnecessarily.

Use grounding strip:



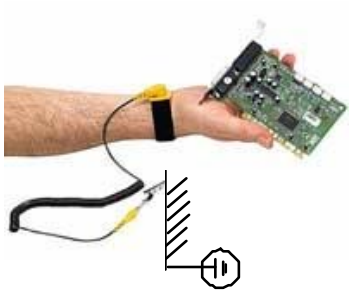

ABB order no.: 3ADV050035P0001

WARNING! Handle the fiber optic cables with care. When unplugging optic cables, always grab the connector, not the cable itself. Do not touch the ends of the fibers with bare hands as the fiber is extremely sensitive to dirt. The minimum allowed bend radius is 35 mm (1.4 in.).

SDCS-PIN-51, SDCS-PIN-46, SDCS-PIN-48 interface to the power part

The interface to the power part of the converter modules size D5/D6/D7 from 900 A up to 5200 A consists of two boards, the measuring board SDCS-PIN-51 and the pulse transformer board SCDS-PIN-46 or SCDS-PIN-48.

The following figures show the different connections between the SDCS-PIN-51 and SDCS-PIN-46 or SDCS-PIN-48 depending on 2-Q or 4-Q and the size.

The SDCS-PIN-46 is used for converters DCS800-S02-2500 and DCS800-S02-3000 (size D6).

2-Q, no parallel thyristors, size D5/D6/D7

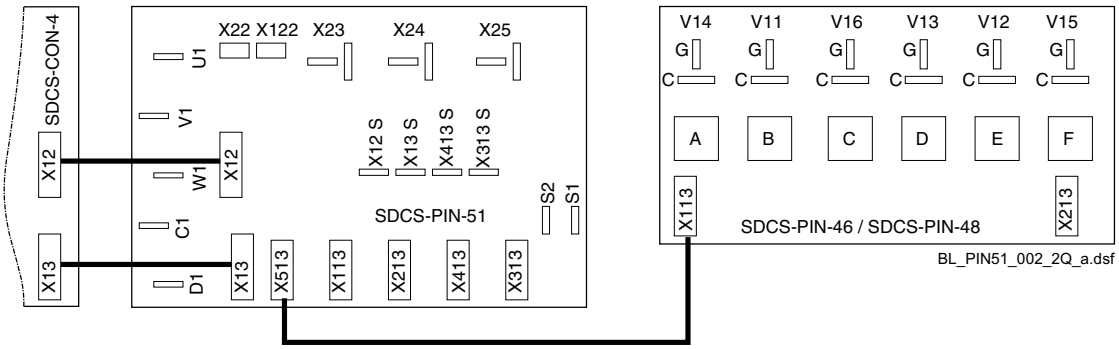

4-Q, no parallel thyristors, size D5/D6/D7

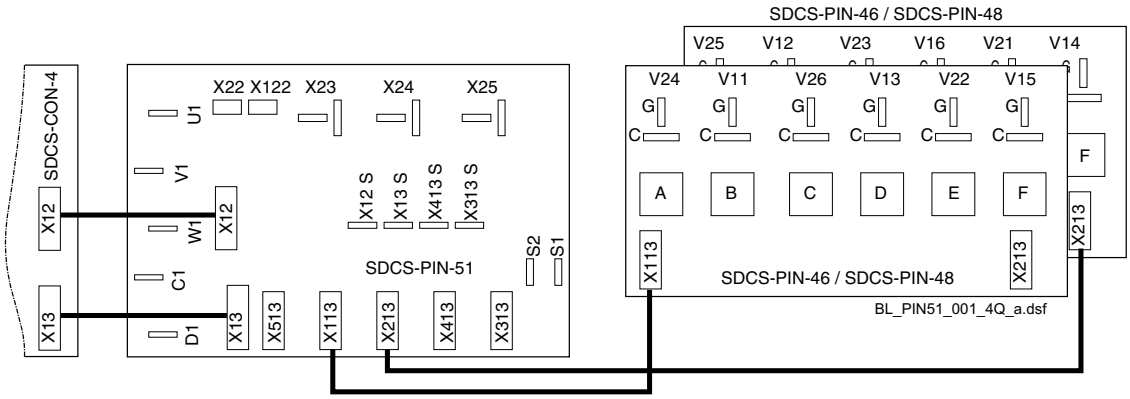

Layout of the SDCS-PIN-46 / SDCS-PIN-48

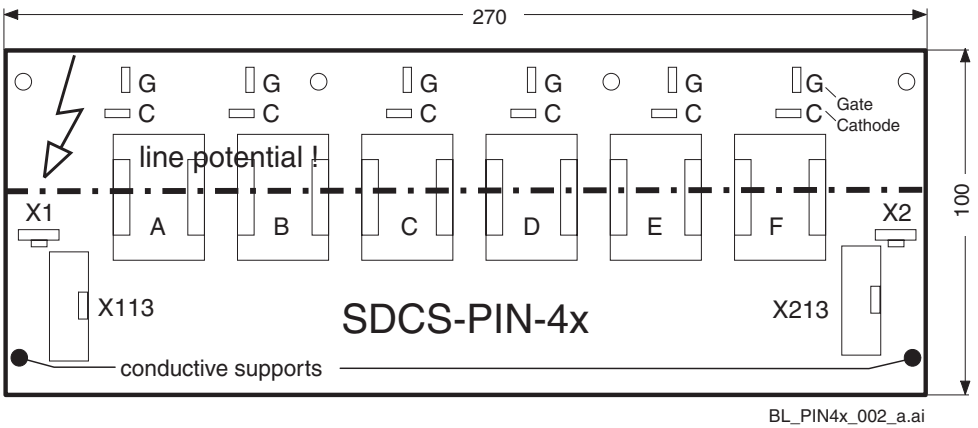

The board consists of six pulse transformers with amplifiers.