MANUFACTURER DOCUMENT PACKAGE

Manufacturer's Manual

Amikon cover with selected original ABB catalogue pages; not an installation manual

APC / DCV 700

APC700PAN

APC DRIVE CONTROL PANEL

OFFICIAL SOURCES

ABB DCV700 catalogue 3ADW000061R0101 Rev A. Original reference pages, not a complete installation manual.

ABB DC Drives

DCV 700 thyristor panels

for 6-/ and 12-pulse DC drive systems
in Drive-MNS-cabinets
22 to 5150/10300 A
10 to 4900/9400 kW

Catalogue



Diagnostics

Digital control allows comprehensive diagnostics, including for example detection of

- overcurrent
- overvoltage
- earth faults

Troubleshooting is easily undertaken via the Control Panel and the Commissioning and Maintenance Tools.

Commonality with AC Drives – Flexible System Configurations

Some of the most important features and benefits **common to both the DC and AC drives** are:

- application control system (APC) – fewer spare parts
- link to automation systems
- commissioning, maintenance and programming tools – less training
- control panel – quick information
- drive-MNS cabinets – standardization benefits; possibility to build mixed systems
- EMC design available

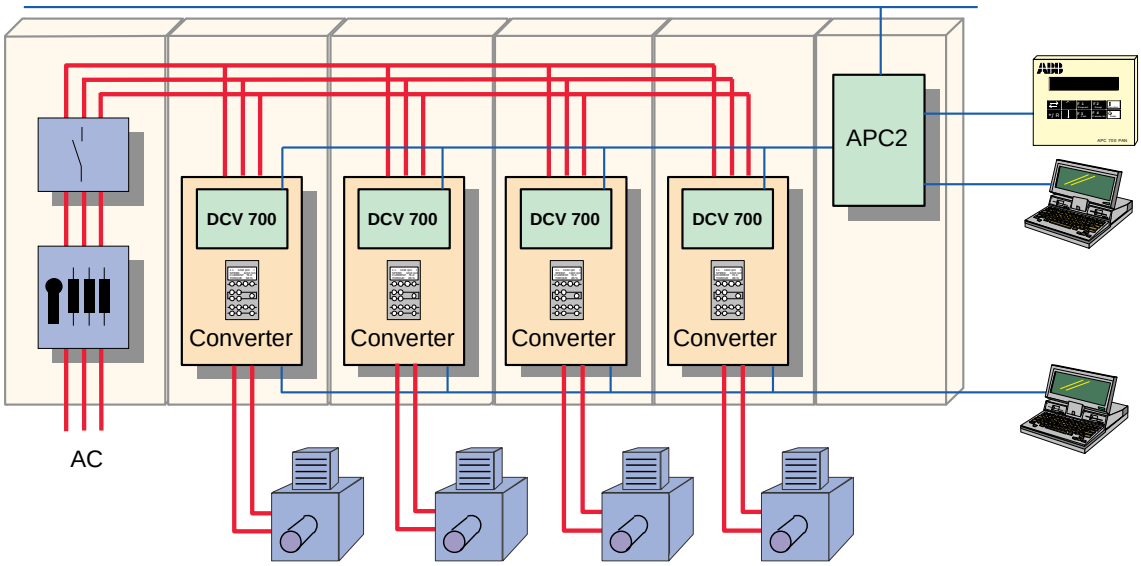

Table of Contents

General Information	2-3
DCV 700 Components	4
Basic Functionality	5
Field Exciters	6
Control Configuration	7
I/O Connections	8
Communication, Control Panel	9
Commissioning and Programming	10
Hardware Options	11
Incoming Supply Sections	12
DCV 700 Types	13
Selecting and Dimensioning	14
Dimensions	15
DCV 700 Type Designations	16
Technical Data	17-19

Control Configuration

The control system provides a flexible and simple method of controlling different drive configurations.

The configurations comprise the converter and its software, Application Controller, Engineering and Maintenance tools and different communication links to other automation systems.

The control system includes an Application Controller (APC) and a Digital Drive Controller (DDC) with well defined functions and interface.

The Application Controller (APC), common for both AC and DC drives, is a single board controller with all the software and hardware facilities needed to handle the application specific functions.

The Digital Drive Controller (DDC) is not programmable but various functions and operating modes can be selected by a fixed number of parameters, which are set from the APC level. The motor control programs are located in the DDC, which is controlled by either a torque or a speed reference provided by the APC.

Stand-alone drive

A single drive has one Digital Drive Controller DDC connected to the Application controller APC.

Small drive system

In small systems, one APC is connected from 1 up to 4 Digital Drive Controllers.
The small drive configuration can also be used in master/slave applications.

Large drive system

Large systems are built by interconnecting application controllers through a communication bus, for example AF100. Common control functions can be distributed to separate nodes. Even very complex systems can be configured by using the same system design concept and its common building blocks, resulting in great savings in, for example, spare parts.

Small drive system

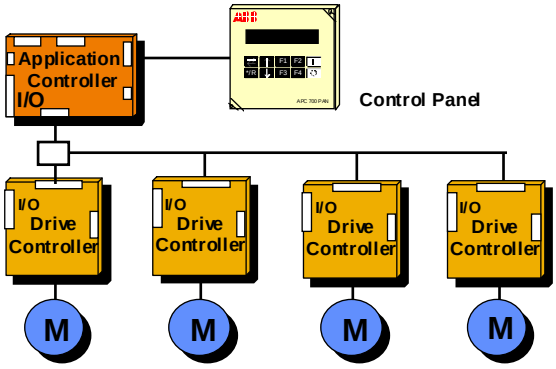

Stand-alone drive

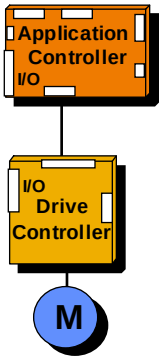

Large drive system

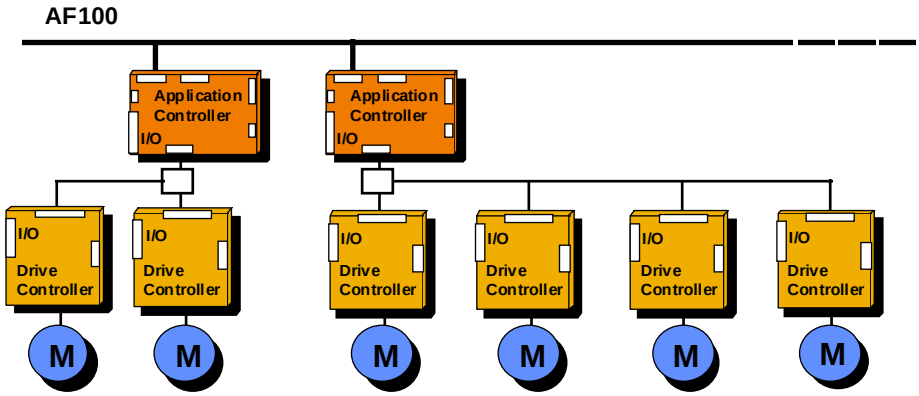

Communication

Various communication boards are available to provide communication links between the APC and overriding control systems.

AF100

Advant Fieldbus 100 is a high-speed serial bus, which is used for communication between APCs or between an APC and an overriding system such as ABB's Advant Controller AC400-family. The bus administrator board CI626 (BA) is needed for controlling the bus when not using the Advant Controller AC450. The communication board YPK112A is used to connect the APC to the Advant Fieldbus 100.

UART Board YPK113A

The UART board, YPK113A, is used to communicate with other overriding systems. Protocols for Siemens Simatic S5 and Allen Bradley DH are available together with SAMI protocol.

Control Panel

The optional Control Panel offers a user-friendly means to communicate with the drive.

- Different languages defined by application program
- 2×20 character display
- Simple operation with 10 pushbuttons (membrane panel well suited to industrial environments)
- Common for AC and DC drives
- Door mounted

The Control Panel provides the following information and functions:

- Status information (run, ready, fault messages)
- Operational control with 4 freely programmable pushbuttons
- Display of reference values (speed, torque)
- Display of actual values (speed, voltage, current)
- Display of fault logger contents
- Uploading, downloading, changing, displaying and saving the Application Controller APC and Drive Controller DDC parameters.

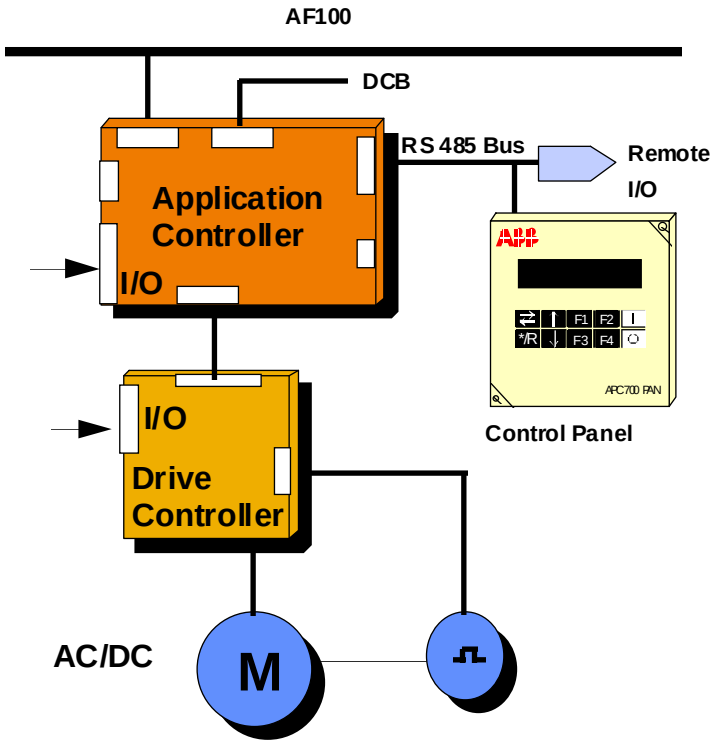



The ABB Group is the largest electrical engineering company in the world.
We offer small and medium range a.c. and d.c. drives, positioning drives and high-power drives. We serve a wide variety of industries in more than 140 countries.

ABB Industrietechnik AG
Antriebe und Automation
Postfach 1180
D-68619 Lampertheim
Telefon +49(0) 62 06 5 03-0
Telefax +49(0) 62 06 5 03-6 09

3ADW 000 061 R0101 REV A
06_97