MANUFACTURER DOCUMENT PACKAGE

Manufacturer's Manual

Amikon cover with selected ABB reference pages; not a complete installation manual

S600 I/O / 3BHT300003R1

CI610

LOCAL INPUT OUTPUT BUS EXTENDER

OFFICIAL SOURCES

ABB Advant Controller 160 Product Guide, 3BSE014721R401, section3.2.1. Original reference pages retained unchanged.

Advant® OCS
with Master software

Advant® Controller 160

Version 2.1

Product Guide

3BSE 014 721R401

Use of **DANGER**, **WARNING**, **CAUTION**, and **NOTE**

This publication includes, **DANGER**, **WARNING**, **CAUTION**, and **NOTE** information where appropriate to point out safety related or other important information.

DANGER Hazards which could result in severe personal injury or death

WARNING Hazards which could result in personal injury

CAUTION Hazards which could result in equipment or property damage

NOTE Alerts user to pertinent facts and conditions.

Although **DANGER** and **WARNING** hazards are related to personal injury, and **CAUTION** hazards are associated with equipment or property damage, it should be understood that operation of damaged equipment could, under certain operational conditions, result in degraded process performance leading to personal injury or death. Therefore, comply fully with all **DANGER**, **WARNING**, and **CAUTION** notices.

TRADEMARKS

Master, MasterPiece, MasterView and MasterAid are registered trademarks of ABB Asea Brown Boveri Ltd. MasterNet, MasterBus, and MasterBatch are trademarks of ABB Asea Brown Boveri Ltd. Advant, AdvaCommand, AdvaInform, AdvaBuild, AdvaSoft and AdvaControl are reg. trademarks of ABB Process Automation Corp. HART is a trademark of HART Communication Foundation. HP and all HP-products are registered trademarks of Hewlett-Packard Company. IBM and all IBM-products are trademarks of International Business Machines Corporation. KERMIT is copyright 1985, Trustees of Colombia University. Lotus 1-2-3 is a trademark of Lotus Development Corporation. MATLAB is a registered trademark of The MathWorks Inc., USA. MODBUS is a registered trademark of GOULD Electronics. MOTIF and OSF are trademarks of Open Software Foundation. MS-DOS, Microsoft, Microsoft Excel, and Word for Windows are registered trademarks of Microsoft Corporation. Postscript is a registered trademark of Adobe Systems Inc. PROFIBUS and PROFIBUS-DP are trademarks of Profibus International (P.I.). Siemens and all Siemens-products mentioned in this publication are trademarks of Siemens AG. UNIX is a registered trademark of AT&T Corporation. VAX, VMS, Digital, DEC, VT100 - VT420 are trademarks of Digital Equipment Corporation. X-window Systems is a trademark of Massachusetts Institute of Technology. All rights to other Trademarks reside with their respective owners.

NOTICE

The information in this document is subject to change without notice and should not be construed as a commitment by ABB Automation Products GmbH. ABB Automation Products GmbH assumes no responsibility for any errors that may appear in this document.

In no event shall ABB Automation Products GmbH be liable for direct, indirect, special, incidental or consequential damages of any nature or kind arising from the use of this document, nor shall ABB Automation Products GmbH be liable for incidental or consequential damages arising from use of any software or hardware described in this document.

This document and parts thereof must not be reproduced or copied without ABB Automation Products GmbH's written permission, and the contents thereof must not be imparted to a third party nor be used for any unauthorized purpose.

The software described in this document is furnished under a license and may be used, copied, or disclosed only in accordance with the terms of such license.

CE MARKING

This product meets the requirements specified in EMC Directive 89/336/EEC and in Low Voltage Directive 72/23/EEC and 93/68/EEC.

Copyright© ABB Automation Products GmbH 2001.

3BSE001264/E

Template: 3BSE001286/E

3BSE 014 721R401

3.2 Input/Output Hardware

3.2.1 S600 Local I/O

The S600 I/O system consists of I/O modules with typically 16 or 32 input or output channels, depending on the type of module. The I/O modules are placed in I/O stations which are built up by one or two I/O subracks. I/O modules can also be inserted into the controller subrack.

The general description of the I/O system is given within the Advant OCS Product Guide with the same chapter number.

The following chapter contains specific information for Advant Controller 160.

3.2.1.1 I/0 Station with Redundant Bus Extension

For Advant Controller 160 the I/O bus extension can be configured for redundancy with two CI615 interface modules and two extension bus lines. This configuration provides increased system reliability compared to non redundant I/O bus extension.

Each I/O station connected to both extension bus lines contains two bus extenders, CI610, which must be put in position 1 and 2.

Table 3-4. Bus Extender Modules

Consists of	Description
CI610	Bus extender module for I/O station
CI615	Bus extender module for Basic Station

The maximum bus cable length of each bus line is 20 m (65 ft.).

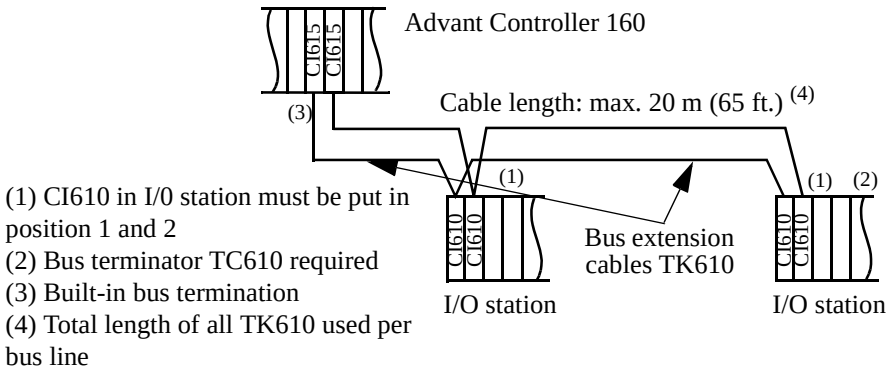

Figure 3-4. Configuration of I/O Stations for AC 160 with Redundant Bus Extension

The I/O stations may be mounted in the same or in adjacent cabinets. The stations must be connected to a common ground; the voltage difference at the ground terminals must be less than ± 2 volts.

The bus extension cable TK610 can be delivered in lengths of 2.5, 5 and 10 m (6.6, 16.4 and 32.8 ft.). The above figure shows the configuration with redundant bus extension.

The table below specifies the equipment used to build up I/O stations with redundant bus extensions.

Table 3-5. I/O units with Redundant Bus Extension

Units	Description
Subrack RF615, Cable duct RC610 and two Bus extenders CI610.	I/O station with redundant bus extender.
Subrack RF620, Cable duct RC610, Bus cable TK612 and Power cable TK615.	I/O extension kit.
2× (Bus extenders CI615 for base station and Bus terminators TC610 for I/O extension bus).	2× I/O bus extension kit.
RC620	I/O Fan unit 24 V.

3.2.2 S800 Distributed I/O

The S800 I/O is a distributed I/O for Advant Controller 110, Advant Controller 160, and Advant Controller 450 via Advant Fieldbus 100. S800 I/O is also used as a directly connected I/O to Advant Controller 70.

The S800 I/O system consists of I/O modules with typically 4, 8 or 16 input or output channels, depending on the type of module.

The I/O station is connected to Advant Fieldbus 100 via a redundant or non redundant Fieldbus Communication Interface (FCI).

The *S800 I/O System General Information and Installation User's Guide* gives more details about these modules. The *S800 I/O Product Guide* gives a first overview.

The following S800 I/O modules are supported:

Table 3-6. S800 I/O Modules Supported by Advant Controller 160

Module type	Type designation
CI	CI810, CI820, CI830
AI	AI801, AI810, AI820, AI830, AI835
AO	AO801, AO810, AO820
DI	DI801, DI810, DI811, DI814, DI820, DI821, DI885
DO	DO801, DO810, DO814, DO815, DO820, DO821

Table 8-11. Main Supply Filter (Continued)

Description	Consists of	Article No.
Main Supply Filter, 250 V, 55 A	–	3BSC740008R1
Main Supply Filter, 250 V, 80 A For DC main supply, 24 V d.c., 48 V d.c.	–	3BSC740009R1

8.4.7 S600 I/O

Table 8-12. S600 I/O Units

Description	Consists of	Article No.
I/O station, non redundant bus extender	Subrack RF615, Cable duct RC610 Bus extender CI610	3BSE000650R1
I/O extension kit	Subrack RF620, Cable duct RC610 Bus cable TK612, Power cable TK615	3BSE011071R1
I/O bus extension kit	Bus extender CI615 for base station Bus terminator TC610 for I/O extension bus	3BSE000756R1
I/O station, **redundant** bus extender	Subrack RF615, Cable duct RC610 2 Bus extenders CI610	3BSE011004R1

Table 8-13. S600 Analog Input Modules

Description	Consists of	Article No.
32 channels, 12 bits resolution, single ended, 0-20 mA, shunt 250 Ω	AI610	3BHT300000R1
16 channels, 12 bits resolution, differential, 0-20 mA, 4-20 mA, ±20 mA or ±10 V, shunt 250 Ω, CMV 100 V, CMRR > 80 dB (16 2/3, 50 or 60 Hz)	AI620	3BHT300005R1
16 channels, 12 bits resolution, galvanic isolated as one group, 0-20 mA, CMV 50 V, CMRR> 100 dB, Shunt 100 Ω	AI625	3BHT300036R1