MANUFACTURER DOCUMENT PACKAGE

Manufacturer's Manual

Amikon cover with selected original manufacturer reference pages

ABB DDCTool / YPC111A

YPC111A 61004955 3AFE61004955

PLASTIC-FIBRE OPTICAL DISTRIBUTOR

OFFICIAL SOURCES

ABB DDCTool User Manual. Selected original pages retain their content, color and aspect ratio.

ACV 700
DCF 500/700
DCS 500
DCV 700
TSU

DDCTool

User's Manual

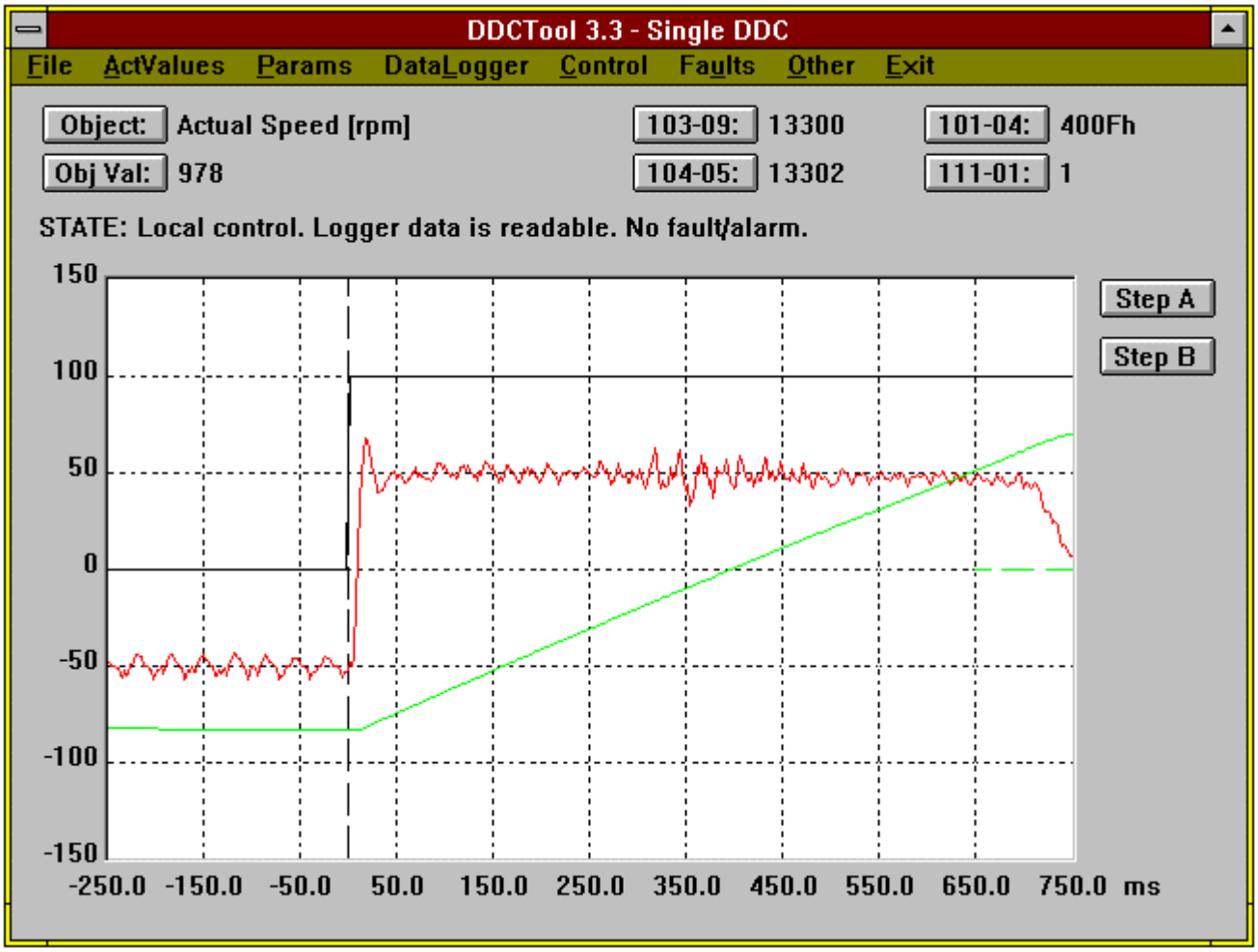

Channel A is used for the DDCTool communication. For channel A there are two types of connectors, V2 and V5 for plastic fibre cable and V1 and V4 for glass fibre cable.

On SNAT 601/609 TAI connectors V10 (IN1) and V11 (OUT1) are used. On SDCS-COM-1 connectors V1 (IN1) and V2 (OUT1) are used.

Make sure that light transmitters are connected to light receivers (do not connect a receiver to another receiver!).

Glass fibre cable is not included in the DDCTool package. It has to be ordered separately. When a glass fibre cable is used, an optical distributor YPC115A is required between the DDCTool board and the target system (see *Figures 3 - 6* and *3 - 7*).

Connecting the DDCTool board to multiple DDCs

In the case of only one DDC, a direct connection between the DDCTool board and the DDC is sufficient.

If there are several DDCs and only one PC, YPC111A optical distributors can be used between the DDCTool board and the DDCs. YPC111A has one connection for the DDCTool board and four connections for the DDCs or lower level optical distributors. When using the YPC111A board and plastic fibre cable, the maximum length between the boards is 20 metres.

If the lengths between the DDCTool boards are over 20 metres the YPC115A board and glass fibre cable should be used. The maximum length in this case is 1000 metres.

Optical distributors can be connected to a tree or chain form. The height of the tree / length of the chain depends on the number of DDCs in the system (max number of DDCs is 249).

Optical distributors use +24 V auxiliary power.

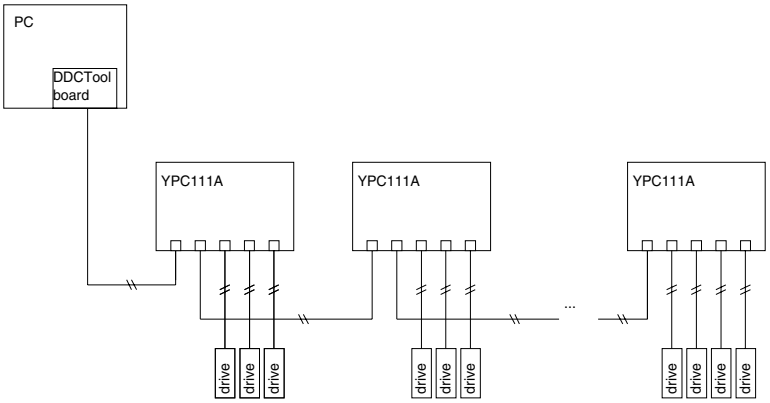

Figure 3 - 4. Chain form of the YPC111A optical distributor. When using plastic fibre cable the maximum length is 20 metres.

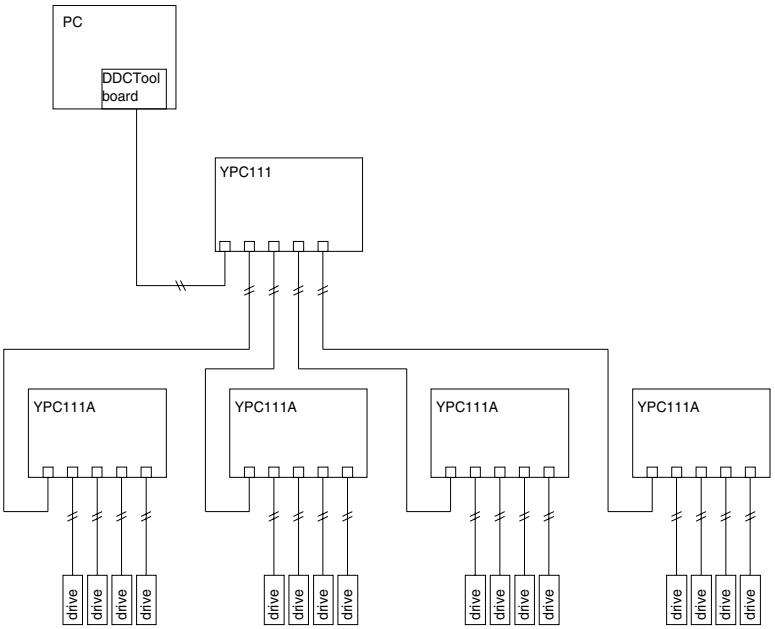

Figure 3 - 5. Tree form of the YPC111A optical distributor. When using plastic fibre cable the maximum length is 20 metres.

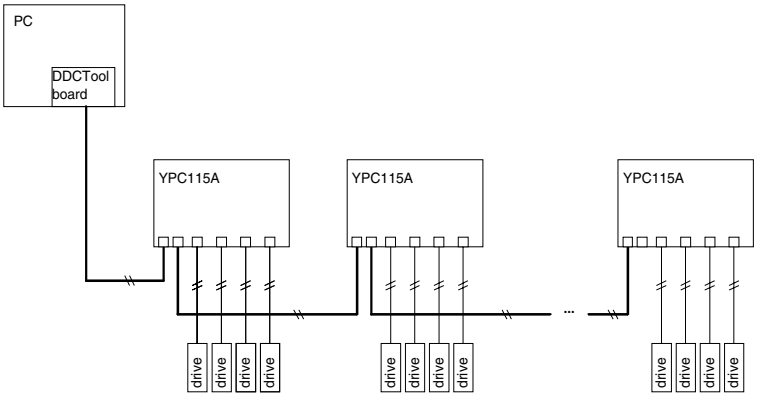

Figure 3 - 6. The chain form of the YPC115A. When using glass fibre cable the maximum length is 1000 metres (the dark lines).

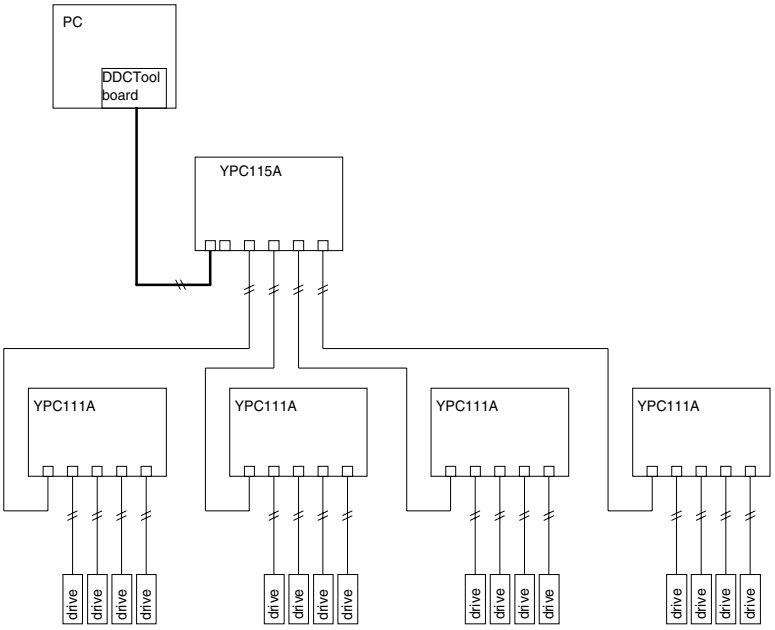

Figure 3 - 7. The tree form of one YPC115A and four YPC111As.